RC4WD Super Duty Blade Snow Plow

Step 1

Snow Plow Assembly

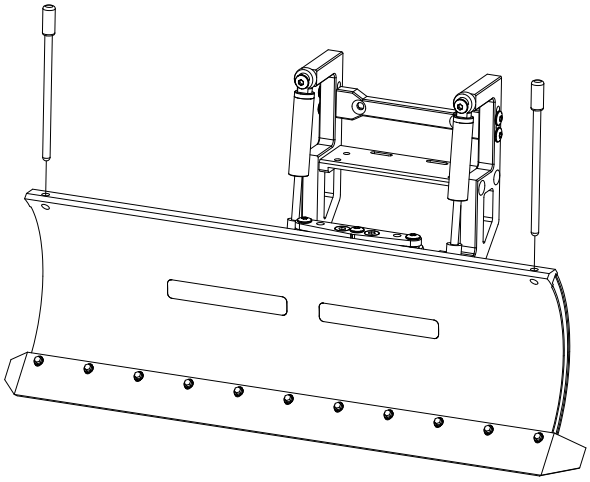

Step 2

X2
Z-S0629
M3 Black Lock Nut

X4
Z-S0651
M3 x 6mm BHCS

X1
Z-S0652
M3 x 8mm BHCS

X2
Z-S0655
M3 x 14mm BHCS

Snow Plow Assembly

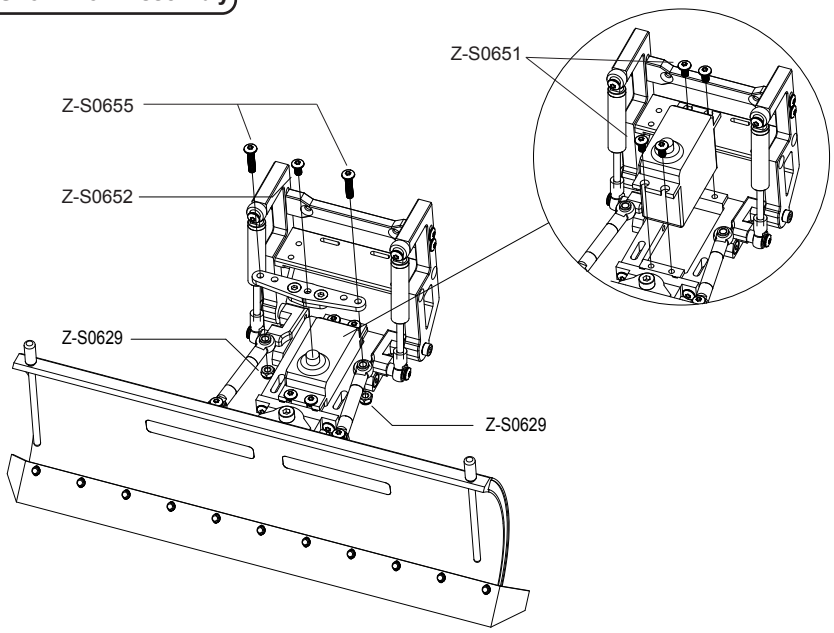

Step 3

X2
Z-S0648
M3 x 6mm FHCS

Snow Plow Assembly (Installing on D90/110 and TF2 Marlin Edition)

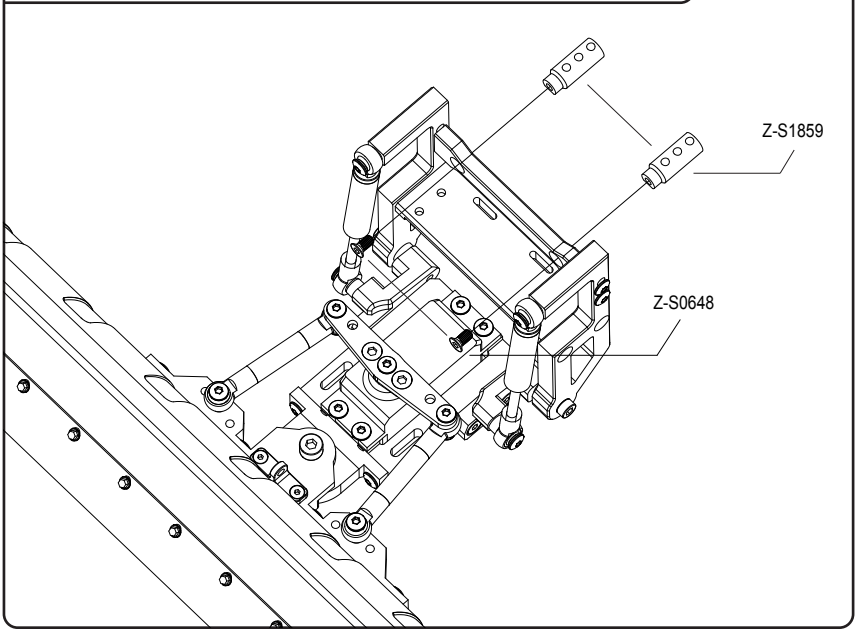

Step 4

X2
Z-S0648
M3 x 6mm FHCS

Snow Plow Assembly (Installing on TF2 Chassis w/Mojave II 2/4 Door Body)

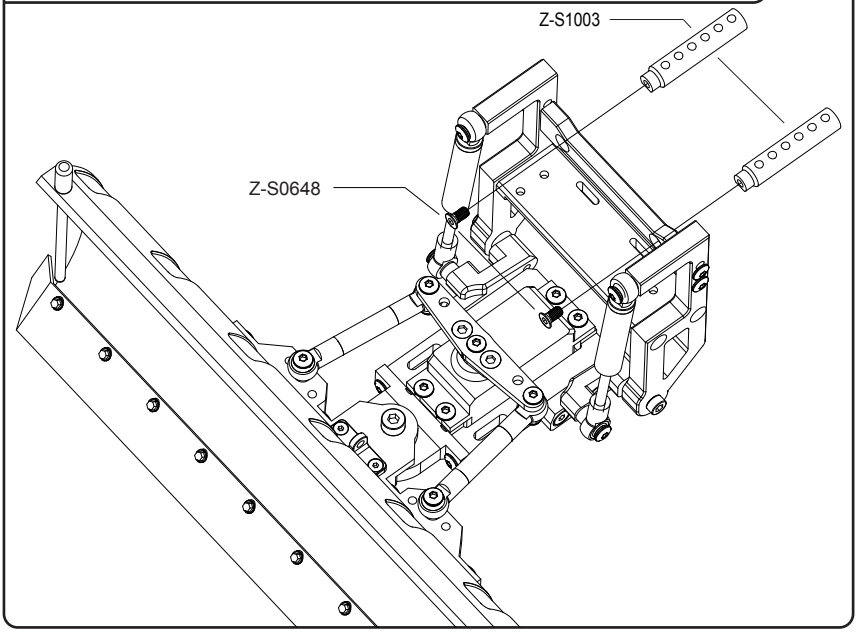

Step 5

M2 x 5mm FHCS

X4

Z-S0762
M2.5 x 4mm SHCS

Snow Plow Assembly

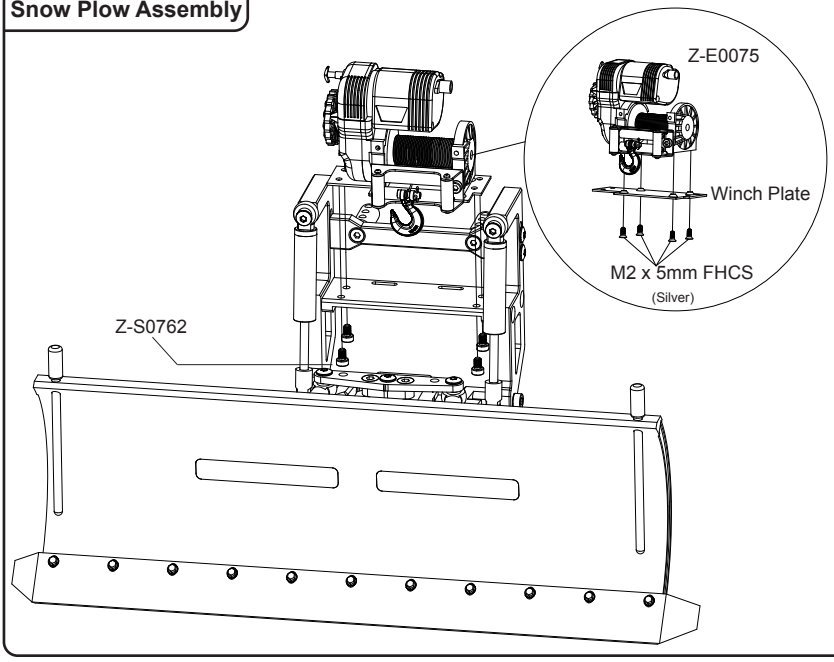

Step 6

Snow Plow Assembly

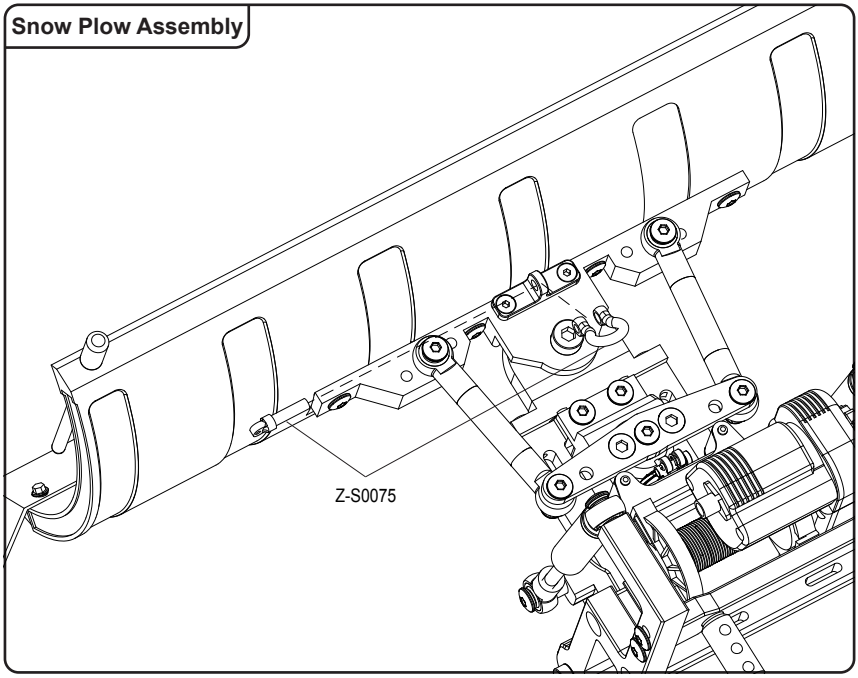

Step 7

Snow Plow Assembly

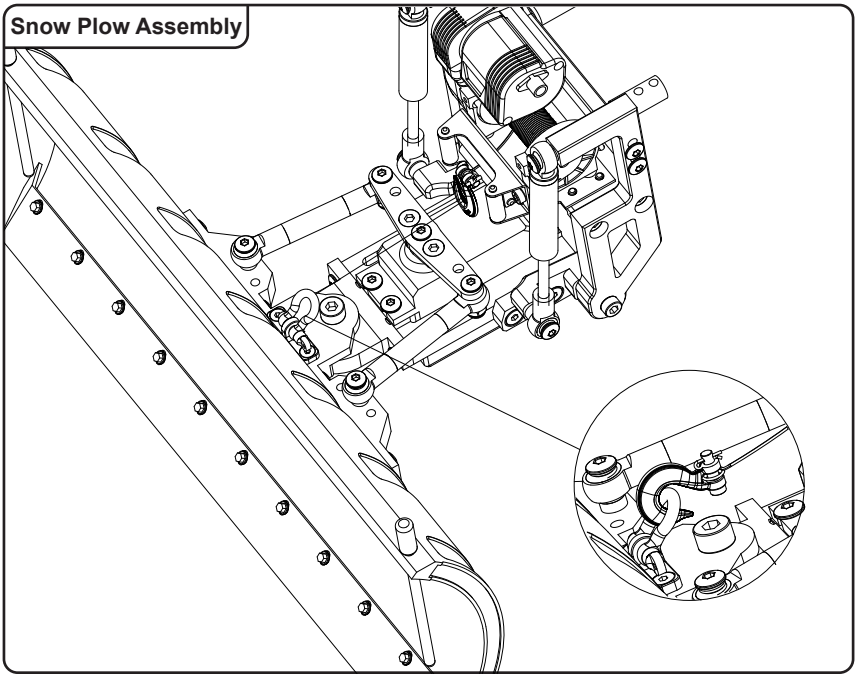

Step 8

X2
Z-S0652
M3 x 8mm BHCS

X2
Z-S0650
M3 x 15mm
Set Screw

Installing on D90/110

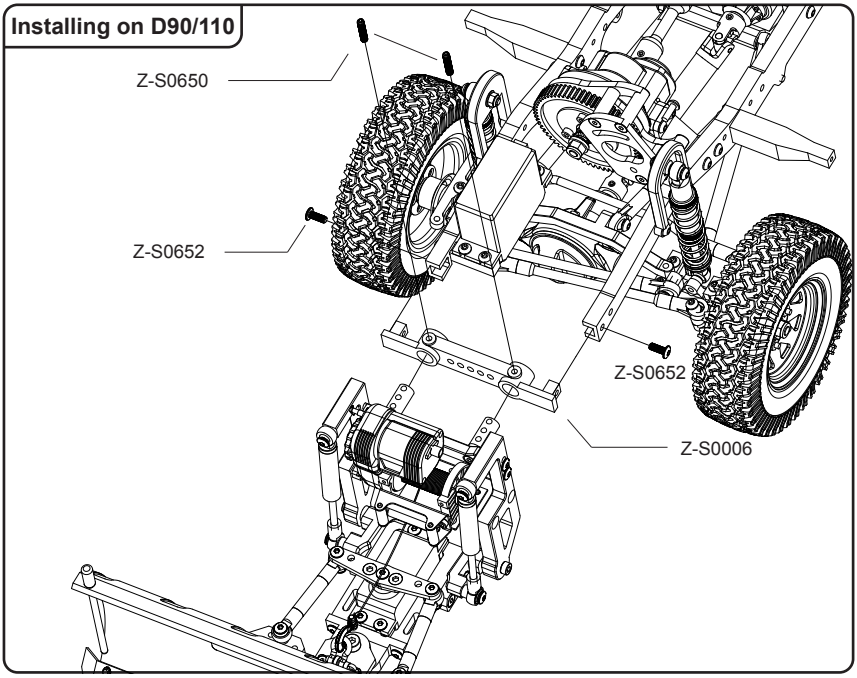

Step 9

X4

Z-S0855
M2.5 x 6mm SHCS

Installing on D90

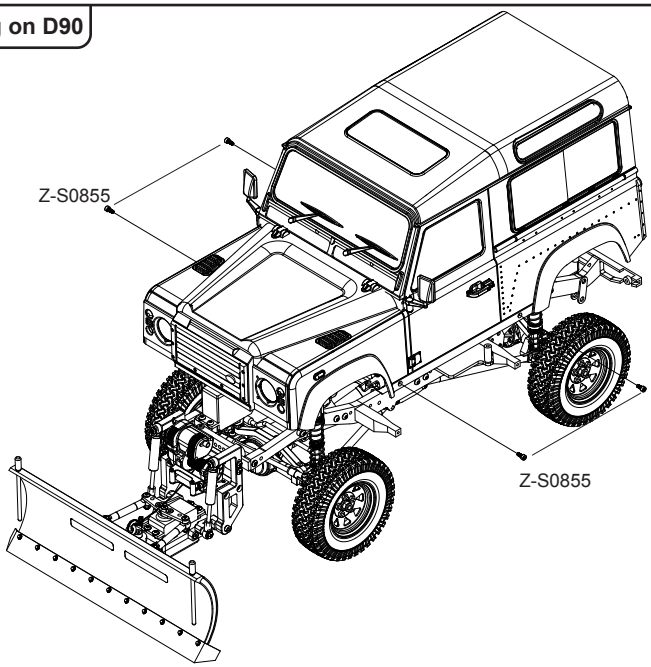

Step10

X4

Z-S0855
M2.5 x 6mm SHCS

Installing on D110

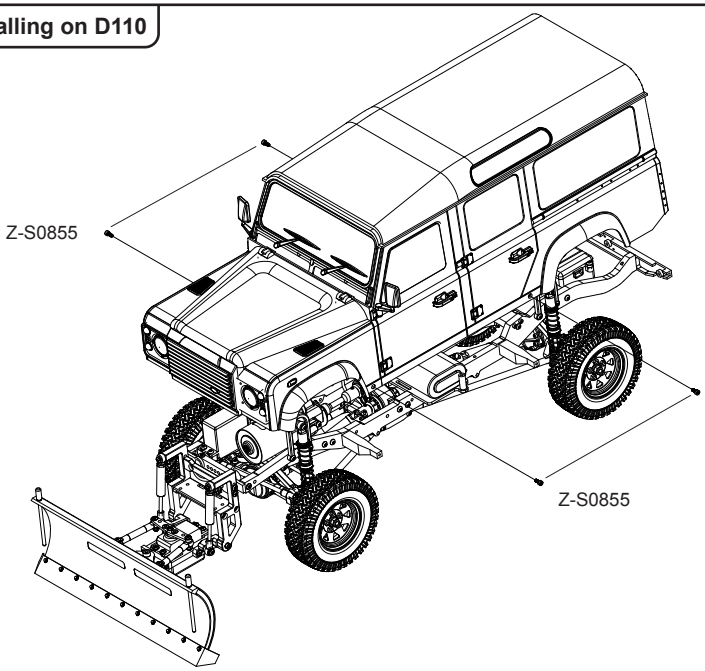

Step11

X2

Z-S0650
M3 x 15mm
Set Screw

Installing on TF2 Marlin Edition

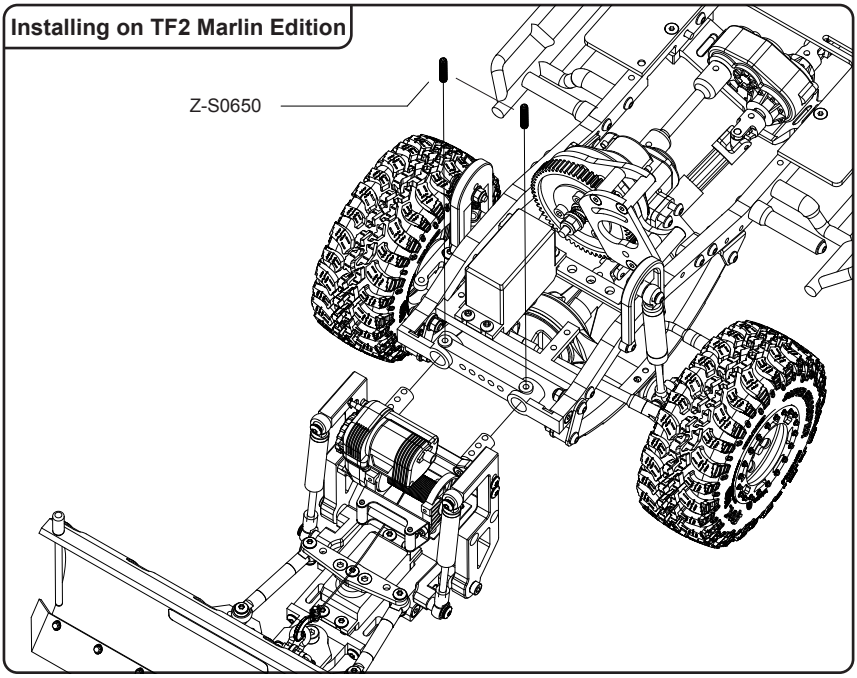

Step12

X4

Z-S0653
M3 x 10mm BHCS

Installing on TF2 Marlin Edition

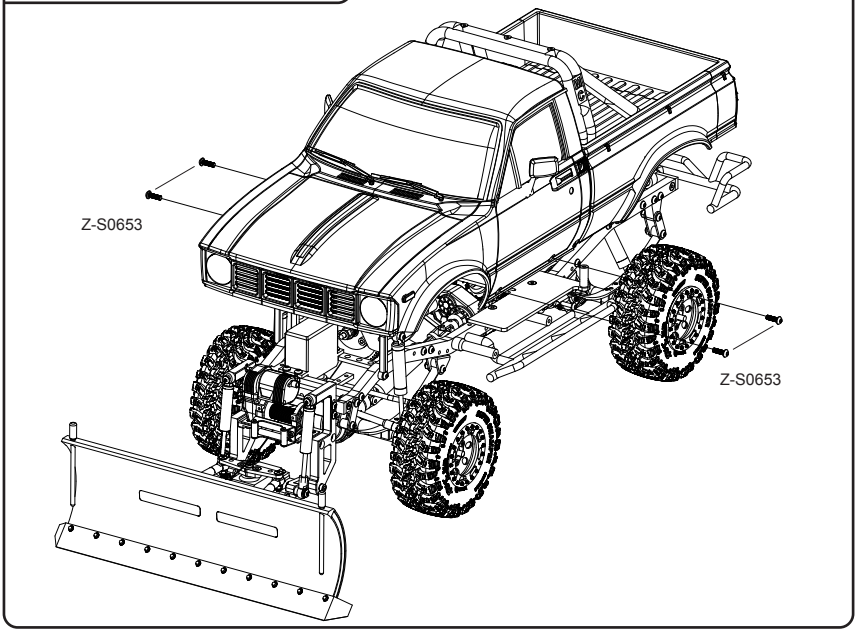

Step13

Installing on TF2 Chassis w/Mojave II 2/4 Door Body

Trim this section off the body as marked by the black lines.

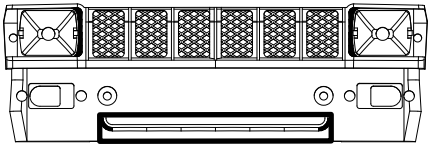

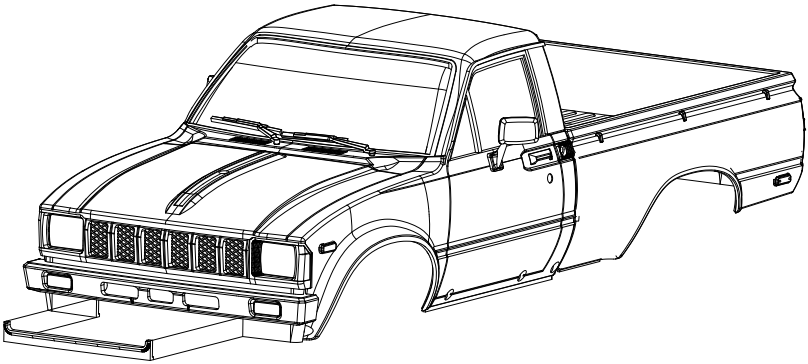

Step14

X2
Z-S0649
M3 x 8mm FHCS

X2
Z-S0650
M3 x 15mm
Set Screw

Installing on TF2 Chassis w/Mojave II 2/4 Door Body

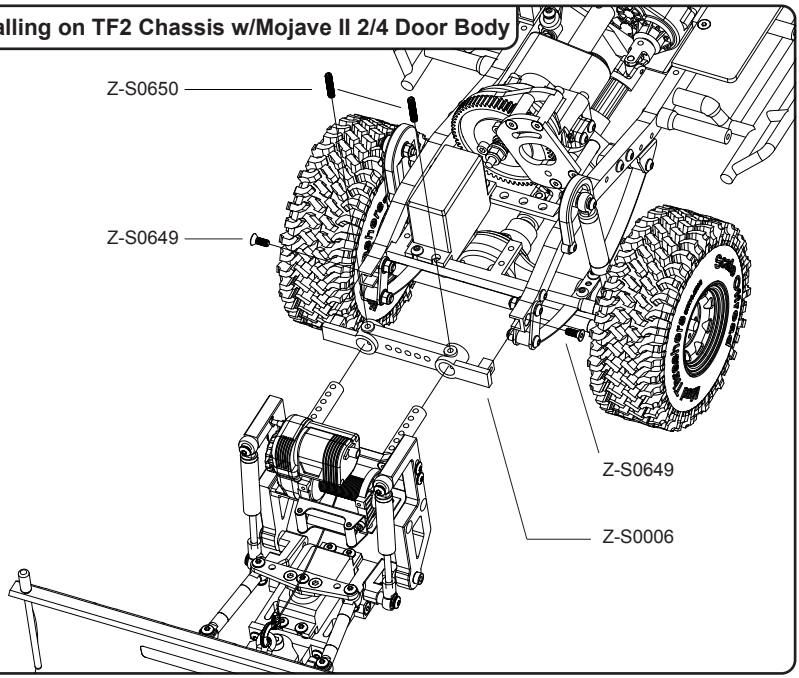

RCHWD

Step15

X4

Z-S0653

M3 x 10mm BHCS
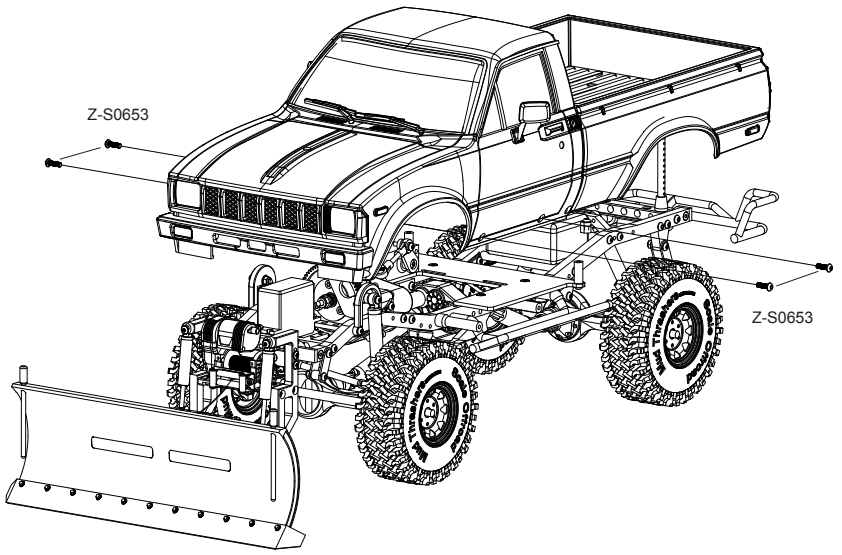
Installing on TF2 Chassis w/Mojave II 2/4 Door Body