

FEATURES

1. 1982 TOYOTA PICKUP HARD BODY
2. YOTA 22R ENGINE BAY W/DRESS UP KIT
3. LED BASIC LIGHTING SYSTEM
4. STAMPED STEEL 1.7" BEADLOCK SR5 WHEELS
5. BFGOODRICH ALL TERRAIN K02 1.7" SCALE TIRES
6. THE ULTIMATE SCALE SHOCKS (60/80MM)
7. YOTA II ULTIMATE SCALE CAST AXLES (XVD)
8. SUPER SOFT FLEX LEAF SPRINGS
9. 540 CRAWLER BRUSH MOTOR 45T
10. R3 SINGLE SPEED TRANSMISSION
11. CENTER MOUNTED HAMMER TRANSFER CASE
12. TWISTER HIGH TORQUE METAL GEAR DIGITAL SERVO
13. OUTCRY III WATERPROOF ESC
14. 6-CELL 3000MAH NIMH BATTERY W/XT60 PLUG
15. MARLIN CRAWLER SIDE PLASTIC SLIDERS V2
16. MARLIN CRAWLER FRONT WINCH BUMPER W/STINGER V2
17. REAR PLASTIC TUBE BUMPER
18. FRONT INNER FENDER SET
19. XR3 3-CHANNEL 2.4GHZ TRANSMITTER/RECEIVER RADIO
20. UNIVERSAL NIMH PEAK BATTERY CHARGER

THE 1982 TOYOTA PICKUP TRUCK, RECOGNIZED FOR ITS TIMELESS DESIGN, IS NOW AN EXCITING ADDITION TO THE RC4WD 1/10 READY-TO-RUN LINE-UP!

THIS LICENSED RTR SHOWCASES THE ICONIC '80S TOYOTA LIVERY PAINT STYLE FOUND ON FULL-SIZE CLASSIC MODELS OF THAT ERA! HIT THE SHOWROOM FLOOR AND OPEN THE HOOD TO SHOW OFF THE 22R ENGINE BAY WITH PAINTED PARTS AND DRESS-UP KIT! AUTHENTIC SCALE DETAILS INCLUDE METAL EMBLEMS, FITTED INNER FENDERS, A MOLDED INTERIOR, AND A PRE-INSTALLED LED KIT.

NEW SUSPENSION UPDATES ALLOW FOR BETTER ARTICULATION OUT OF THE BOX, WITH THE HELPER LEAF SPRINGS AND INNER SHOCK SPRINGS UNINSTALLED BUT INCLUDED FOR PERSONAL TUNING! THE SHOCKS FEATURE X-RING TECHNOLOGY WHICH REDUCES CONTACT FRICTION FOR SMOOTH SHAFT MOVEMENT WHILE IMPROVING OIL RETENTION AROUND THE SHOCK SHAFT.

THE TRAIL FINDER 2 CHASSIS FEATURES YEARS OF TRAIL TESTING AND COMES WITH INNOVATIVE NEW FEATURES! AN UPDATED VERSION OF THE YOTA II FRONT AXLE NOW INCLUDES UPGRADED XVDS. THE LEAF SPRINGS COME INSTALLED UNDER THE AXLES, LOWERING THE RIDE HEIGHT AND CENTER OF GRAVITY FOR BETTER STABILITY WHILE OFF-ROADING. THE STEERING KNUCKLES ARE IMPROVED FOR INCREASED STRENGTH AND DURABILITY.

ELEVATE YOUR ULTIMATE SCALE EXPERIENCE TODAY WITH THE IMPRESSIVE LOOKS AND PERFORMANCE OF THIS 1/10 TOYOTA RTR!



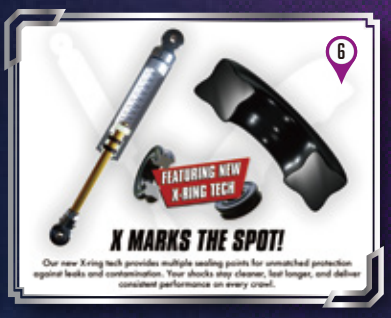

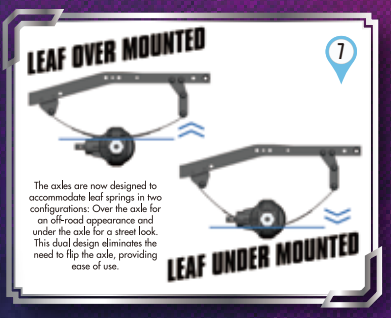



Product photos and descriptions are for illustrative purposes only. All product photos and specifications are subject to change without notice. Actual products may vary. Please review www.rc4wd.com for the most up to date information.

RC4WD

TRAIL FINDER 2

1982 TOYOTA PICKUP

DRIVETRAIN



The R3 Single Speed Transmission comes with a tough cast metal case and wider gears for durability and a Delrin Spur with Slipper Clutch for performance. It also features a sturdy billet aluminum motor mount for added toughness.



The Trail Finder 2 Chassis includes the Hammer Transfer Case that features a cast metal exterior and heavy-duty .8 Mod Widened Gears, ensuring lasting functionality.



Drawing on the success of the RC4WD MOA Gear Sets, the Trail Finder 2 Chassis has the most durable gears RC4WD has to offer, capable of staying on the trail day after day.



The most scale accurate axles on the market, the RC4WD Yota II Ultimate Scale Cast Axles feature innovative 8 degree round knuckles, unique removable diff covers, lower mounting points and a compact offset pumpkin in the front.



The driveshafts found on the Trail Finder 2 Chassis feature heavy-duty uni-joint metal shafts for great driveline angles and durability on the trail.

PRECISION ENGINEERED · BULLET-PROOF COMPONENTS · PERFORMANCE PARTS

For more information, upgrades and all the latest news, visit us at: rc4wd.com

RC4WD

TRAIL FINDER 2

1982 TOYOTA PICKUP



The shocks feature X-ring technology which reduces contact friction for smooth shaft movement while improving oil retention around the shock shaft.

SUSPENSION



The Trail Finder 2 Chassis includes a set of RC4WD Ultimate Scale Shocks. These ultimate scale shock absorbers offer realistic looks and performance. They are machined from billet aluminum with internal springs and rebuildable internal parts!

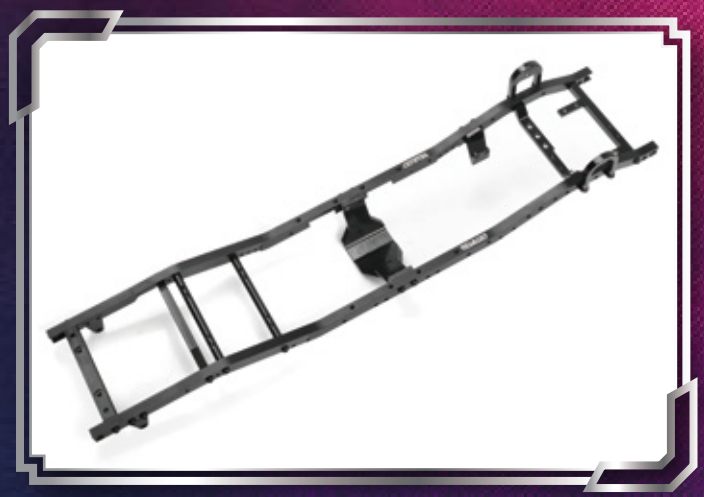

With strength in mind, the ladder frame design of the Trail Finder 2 Chassis is made with CNC machined, billet aluminum and comes with scale shock hoops, a chassis servo mount, and transmission and transfer case mounts.



This truck includes a set of Stamped Steel 1.7" Beadlock SR5 Wheels (Chrome). The wheels are made from stamped steel and have a smooth silver finish for added detail.



Every RTR needs a tough set of tires to hit the trails and the included RC4WD BFGoodrich All Terrain K02 1.7" Scale Tires deliver the perfect amount of traction with its advanced X2S³ soft and sticky compound. The scale details complete the look in just the right size.

PRECISION ENGINEERED · BULLET-PROOF COMPONENTS · PERFORMANCE PARTS

For more information, upgrades and all the latest news, visit us at: rc4wd.com

RC4WD

TRAIL FINDER 2

1982 TOYOTA PICKUP



Straight out of the box, an LED light set comes professionally installed and out of sight, keeping that realistic look.

ELECTRONICS



The Trail Finder 2 Chassis is powered by the tough and durable RC4WD 45 Turn Crawler Motor. With long-lasting performance at its core, this power machine is tuned for rock climbing and scale driving!

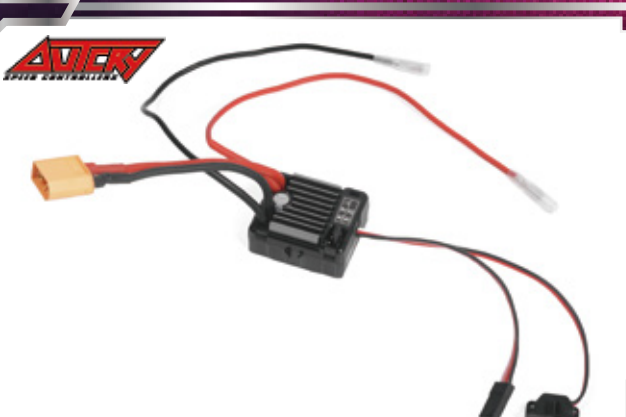

Included is the popular RC4WD Outcry III Waterproof ESC Brushed Speed Controller, with built-in drag brake, for reliable constant power on demand at any time!



With a massive 277.6oz@6V of torque and a full metal geared drivetrain, the RC4WD Twister Metal Gear Digital Servo has the power and performance needed to outmaneuver and overcome tough terrain.



It's ALL in the box! Everything you need is provided to get you on the trails today!

PRECISION ENGINEERED · BULLET-PROOF COMPONENTS · PERFORMANCE PARTS

For more information, upgrades and all the latest news, visit us at: rc4wd.com

RC4WD

TRAIL FINDER 2

1982 TOYOTA PICKUP



This 1982 Toyota pickup features all kinds of amazing scale details including mirrors, door handles, vents, and grille.

ALL-S

THE DET



The body is constructed of durable hard plastic with a classic shape that replicates the full-size model with accuracy and authenticity.



This 1982 Toyota pickup features a full molded plastic engine compartment as well as an opening hood. The masters of scale continue to deliver unparalleled detail!



This 1982 Toyota Pickup Truck body interior features durable molded hard plastic and is professionally painted to match the full size vehicle. Air vents, steering wheel, shift knob are all present to show the realism.



Includes chrome parts and tinted lenses for all signal lights! Featuring the typical chrome accents, this RTR adds an eye-catching aesthetic!

PRECISION ENGINEERED · BULLET-PROOF COMPONENTS · PERFORMANCE PARTS

For more information, upgrades and all the latest news, visit us at: rc4wd.com

RC4WD

TRAIL FINDER 2

1982 TOYOTA PICKUP



SPECIFICATIONS

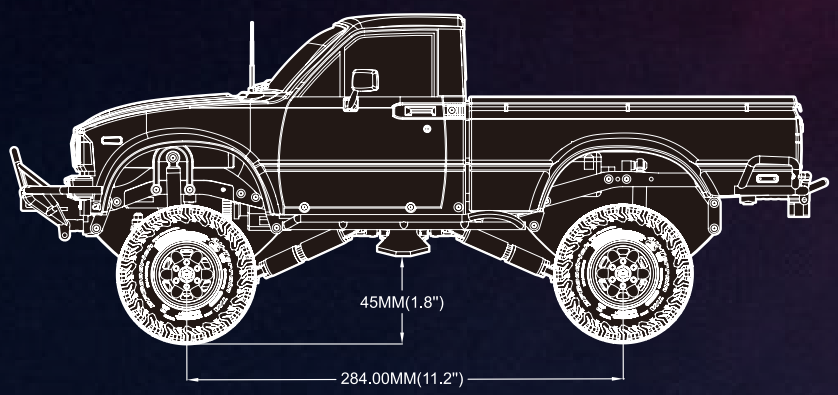

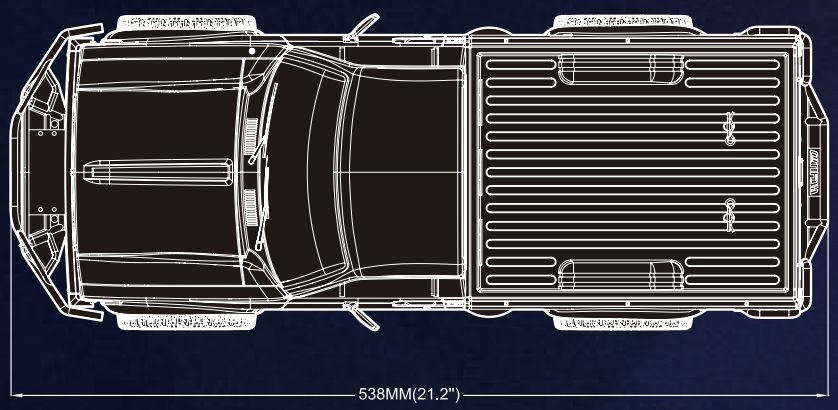

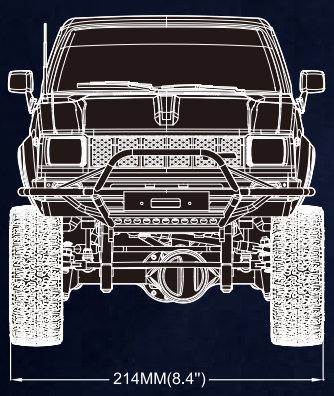

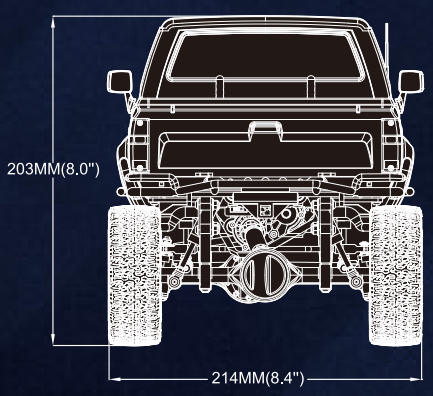



MORE INFO

Hammer Transfer Case
Ratio: 1.47:1
Gears: Wide .8 Mod Hardened Steel Gears
Features: 8 Bearings, Cast Casing, Hardened Gears

R3 Scale Single Speed Transmission
Ratios: Pinion/Spur 14/64 = 1:4.57
Internal Ratio: 1.78:1
Gears: Wide Steel .8 Mod, Delrin Spur, Slipper Clutch

Yota II Ultimate Scale Cast Axles
Ratio: 15/40 = 2.67:1
Width at Hex: 178.2mm

Trail Finder 2 Chassis Features
Features: Billet Aluminum Construction, Adjustable Shock Hoops

Wheels
Type: Stamped Steel 1.7" Beadlock SR5 Wheels (Chrome)
Hub: 12mm Hex
Width: 23mm (0.90”)
OD: 47mm (1.85”)

Tires
Type: RC4WD BFGoodrich All Terrain K02 1.7” Scale Tires
Outer Diameter: 91.4mm (3.59”)
Width: 34.3mm (1.35”)
Inner Diameter: 43.2mm (1.70”)

Trail Finder 2 Truck Dimensions
Wheelbase: 287mm (11.3”)
Width: 221.7mm (8.7”)
Height: 236.8mm (9.3”)
Ground Clearance: 61.9mm (2.4”)
Final Drive Ratio: 31.9:1

PRECISION ENGINEERED · BULLET-PROOF COMPONENTS · PERFORMANCE PARTS

For more information, upgrades and all the latest news, visit us at: rc4wd.com