RC4WD 1/24 TRAIL FINDER 2 RTR W/ MOJAVE II HARD BODY SET (YELLOW)

FEATURES

1. 1/24 TRAIL FINDER2 CNC ALUMINUM CHASSIS SET
2. RC4WD PLASTIC PUNISHER SHAFTS (32MM - 37MM / 1.26" - 1.46")
3. RC4WD 1/24 D44 PLASTIC COMPLETE AXLES
4. R6 MICRO TRANSMISSION
5. TWISTER 5G MICRO SERVO
6. N30 MICRO MOTOR
7. SPRING DAMPERS FOR 1/24 TF2
8. SUPER SCALE 0.7" BEADLOCK WHEELS
9. RC4WD MICKEY THOMPSON 0.7" BAJA CLAW TTC SCALE TIRES
10. RC4WD 7.4V 320MAH LITHIUM ION BATTERY W/ BALANCE PLUG
11. XR2 ULTIMATE MICRO RADIO AND ESC/RECEIVER

ENJOY ALL THE FUN OF OUR POPULAR 1/10 TRAIL FINDER 2 IN A 1/24 SCALE VERSION! THIS 1/24 TRAIL FINDER 2 COMES WITH ALL THE TRUE TO SCALE DETAILING AND QUALITY PERFORMANCE TO CRAWL THROUGH ANY TERRAIN. PERFORMANCE OF THE 1/24 TF2 IS SMOOTH WITH ITS R6 MICRO TRANSMISSION, 4WD DRIVETRAIN, AND 1/24 D44 PLASTIC COMPLETE AXLES. THE 1/24 TF2 COMES WITH PLASTIC 0.7" BEADLOCK WHEELS WRAPPED IN SOME SUPER SCALE MICKEY THOMPSON 0.7" BAJA CLAW TTC SCALE TIRES TO KEEP YOU TRAILING!

WHETHER IT'S OUTSIDE ON A TRAIL OR INSIDE OF YOUR LIVING ROOM ON AN IMPROVISED COURSE, THE 1/24 TF2 COMES PREPARED FOR CREATIVE CHALLENGES AND IS A PERFECT CHOICE FOR ANY THRILL SEEKING ENTHUSIAST. EXPERIENCE ALL THE FUN AND PERFORMANCE OF THE TF2 MOJAVE II, NOW IN 1/24TH SCALE!

RC4WD

1/24 TRAIL FINDER 2

w/ MOJAVE II BODYSET

RC4WD 1/24 TRAIL FINDER 2 RTR W/ MOJAVE II HARD BODY SET (YELLOW)

The 1/24 Trail Finder 2 comes ready for your next scale adventure with a paired, quality 2-in-1 Micro ESC + Receiver and XR2 Micro Radio system.

DRIVETRAIN

With realism and toughness in mind, the R6 Micro Transmission comes equipped with steel transfer case gears mated to the same gear box used in our Warn Winch product line. The transmission case is molded from reinforced nylon to provide a sleek, realistic appearance.

A great truck needs a great servo and the 1/24 Trail Finder 2 RTR features the Twister 5G Micro Servo that comes ready for a range of steering duties!

Get ready because the RC4WD 1/24 D44 Plastic Complete Front and Rear Axles are made from the same trusted material as the 1/10th scale, so expect a heavy duty, maneuverable set. The state of the art front XVD axle features all steel components. The micro D44 axles are fortified with some of the strongest materials out there and coupled with steel ring and pinion gears, front and back. To put it lightly, this RC axle is packing some solid, compact agility.

The Driveshafts for the 1/24 Trail Finder 2 feature fiber-reinforced universals and a high quality shaft for great driveline angles and durability on the trail.

PRECISION ENGINEERED · BULLET-PROOF COMPONENTS · PERFORMANCE PARTS

For more information, upgrades and all the latest news, visit us at: rc4wd.com

RC4WD

1/24 TRAIL FINDER 2

w/ MOJAVE II BODYSET

RC4WD 1/24 TRAIL FINDER 2 RTR W/ MOJAVE II HARD BODY SET (YELLOW)

SUSPENSION

The 1/24 TF2 chassis features a simple front mounted electronics plate for easy mounting of the XR2 Micro ESC/Receiver combo.

This RC suspension has a 4 link front and rear setup, allowing for some impressive shock absorption. These coil over shocks deliver the balanced driving needed for terrain stability!

The RC4WD 1/24 Trail Finder 2 Chassis is comprised of CNC machined aluminum chassis rails, forming a rigid platform. The suspension mounts and cross members are outfitted for durable capabilities.

The 0.7” Beadlock wheels are assembled with scale hex bolts and are mounted to officially licensed Mickey Thompson Baja Claw tires. With that vintage look and pristine handling, this combo is a retro, rough ready setup.

PRECISION ENGINEERED · BULLET-PROOF COMPONENTS · PERFORMANCE PARTS

For more information, upgrades and all the latest news, visit us at: rc4wd.com

RC4WD

1/24 TRAIL FINDER 2

w/ MOJAVE II BODYSET

RC4WD 1/24 TRAIL FINDER 2 RTR W/ MOJAVE II HARD BODY SET (YELLOW)

Smaller in size, this RC Truck was built to deliver a true 1/24 scale driving experience by compacting the popular setup of the bigger 1/10 TF2.

THE DETAILS

The 1/24 Mojave II Hard Body Set comes in 3 colors, atomic blue, radiant red or electric yellow. Pick your favorite or personally customize the paint anyway you want!

The 1/24 Mojave II Hard Body Set includes pre-painted tail lights and side marker lights, adding more realism. An LED light kit is also separately available for bright, night trailing fun!

The 1/24 Mojave II Hard Body Set interior comes molded from durable, hard plastic and simulates the inside look of a full-scale truck cab with sculpted vents, shift knobs, door handles and steering wheel.

The molded square headlights, black bumpers and pre-painted grille provide a subtle, alternative appearance, compared to the chrome detailing of the 1/10 scale model.

PRECISION ENGINEERED · BULLET-PROOF COMPONENTS · PERFORMANCE PARTS

For more information, upgrades and all the latest news, visit us at: rc4wd.com

RC4WD

1/24 TRAIL FINDER 2

w/ MOJAVE II BODYSET

SPECIFICATIONS

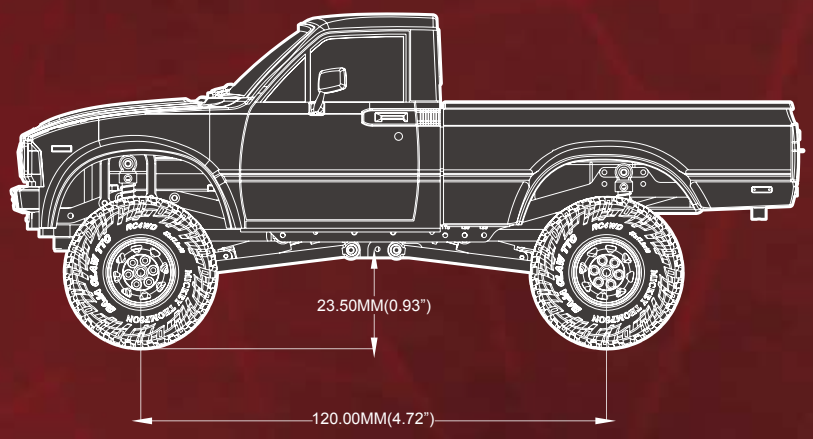

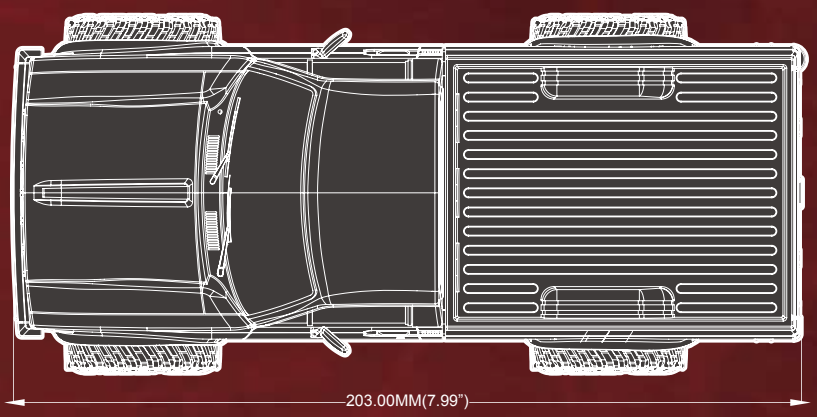

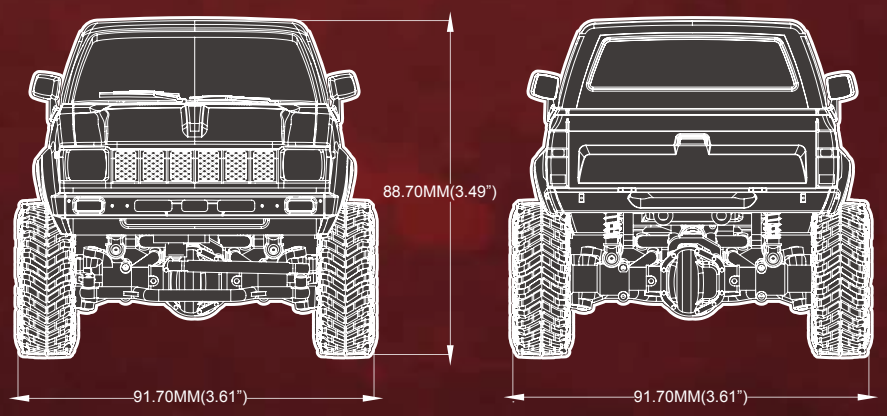

MORE INFO

All New R6 Micro Transmission

Motor: 30:1

Internal Gear Ratio: 1.15:1

Gear Material: Hardened Brass and Steel

Case Material: Strong Durable Nylon

All New 1/24 D44 Plastic Complete Axles

Ratio: 2.67:1

Width: 88.5mm (3.48")

Case Material: Strong Durable Nylon

1/24 TF2 Suspension

4 Link Front and Rear Suspension

Wheels

Type: OEM Plastic 0.7" Beadlock Wheels (White)

Wheels Hub: Pin Type

Width: 10mm (0.39")

OD: 19.5mm (0.76")

1/24 TF2 Truck Dimensions

Wheelbase: 120mm (4.72")

Length: 203mm (7.99")

Width: 91.7mm (3.61")

Height: 88.7mm (3.49")

Ground Clearance: 23.5mm (0.93")

Final Drive Ratio: 2.67:1

Weight: 0.44lbs/0.2kg

PRECISION ENGINEERED · BULLET-PROOF COMPONENTS · PERFORMANCE PARTS

For more information, upgrades and all the latest news, visit us at: rc4wd.com