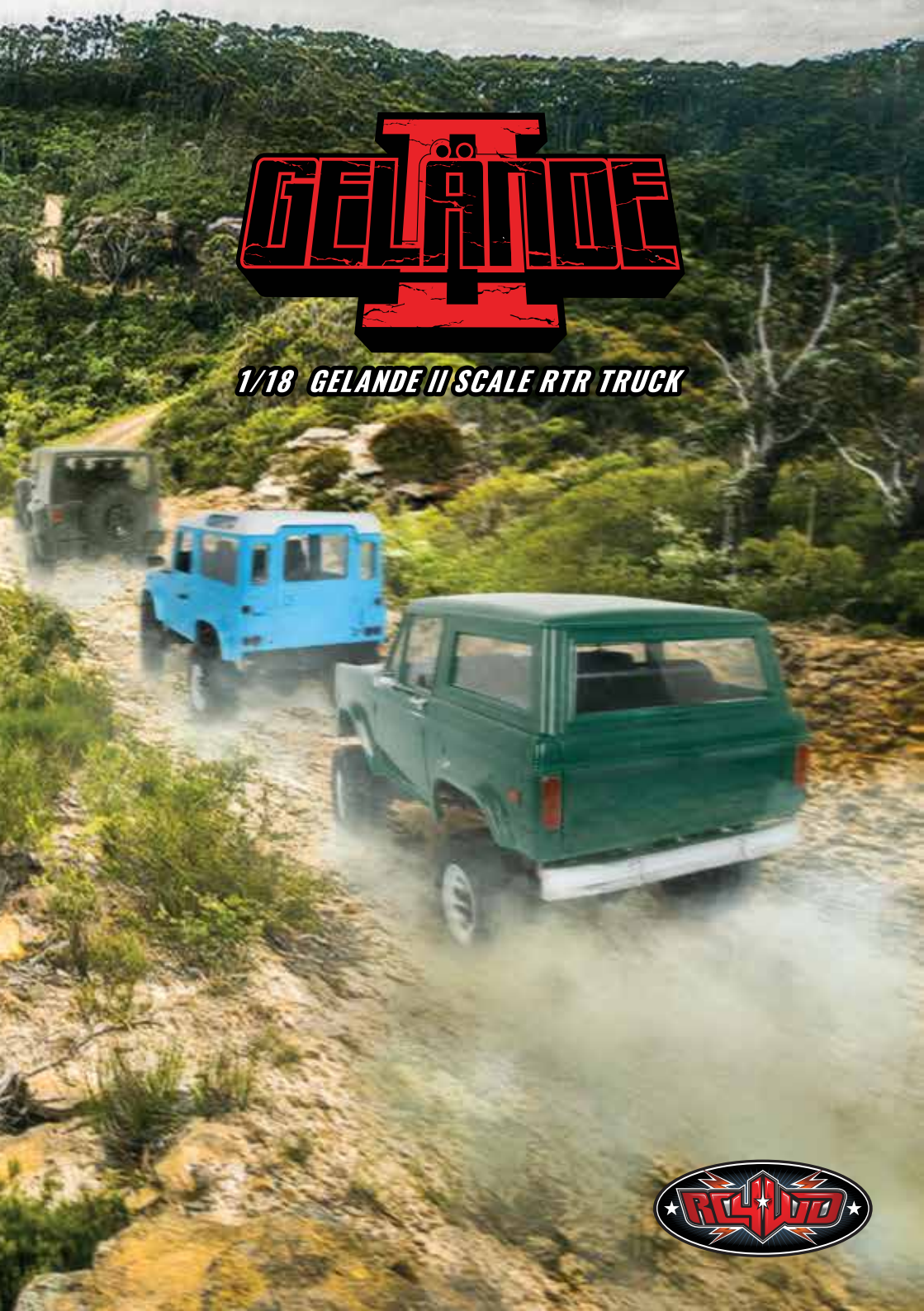
GELÄNDE II
1/18 GELANDE II SCALE RTR TRUCK
RC4WD

Recommended Tools

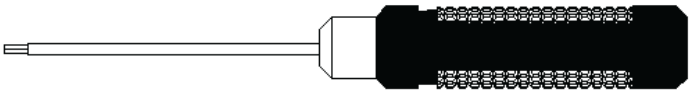

Hex Drivers (1.5mm and 2mm)

Warranty

RC4WD non-electrical products are warranted to be free of defects in materials and workmanship when new. Our limited warranty does not cover damages due to normal wear and tear, user error of assembly or installation, user modifications, user's failure to perform routine maintenance, addition of aftermarket parts or option parts. This warranty lasts 30 days after arrival for original purchaser.

In the event of a defect under this warranty, RC4WD will, at our discretion, replace the product, provided our inspection indicates that an original defect exists. RC4WD reserves the right to replace any product which is no longer available with a product of comparable value and function. If RC4WD determines the repair is not covered under warranty guidelines, we will contact you to discuss your options. If you have any questions, please contact us via email at support@rc4wd.com.

RC4WD warranties its electronics for 30 days from date of arrival. This covers all electrical items except items that are already noted on the individual product page.

BATTERY CHARGING

Do not leave battery and charger unattended

1. Only change batteries that are cool to the touch and are not damaged (swollen, bent, broken or punctured).
2. Connect the charger to the proper wall receptacle noting proper polarity.
3. Plug the battery's connector into the charger's connector. The LED will light red as it is charging.
4. The charger will emit a tone and the LED will change to green once fully charged. NOTE: Monitor the battery while the charging and end the charging process if the charger or battery becomes abnormally hot.
5. Always unplug the battery from the charger immediately upon completion of charging.

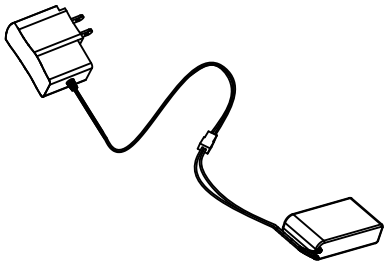

CAUTION: Overcharging a battery may cause a fire.

SPECIFICATIONS

Model	RC4WD LiPo JST Plug Charger
Input	110-240V~50/60Hz
Output	7.4V

This charger is designed to charge only 7.4V 850mAh 2S LiPo Battery.
Make sure that the battery is compatible with the charger's charge rate.
Never let children operate unsupervised while charger is in use.
Adult supervision is recommended at all times.
The charger is for indoor use only. Do not use in case of high humidity conditions or condensation.
Do not attempt to open or modify the charger's case.
Do not let objects or liquids penetrate the charger's cooling vents.
The charger may get hot during use. Use the charger in a well ventilated area, away from people and electrically conductive or inflammable materials.
If the battery has suspicious reactions during the charge or discharge, such as overheating, venting or leaking, immediately disconnect the battery and store it in a safe location, away from people and inflammable materials.

LiPO BATTERY

IMPORTANT: To prevent battery from leaking, overheating or exploding, carefully follow these instructions! Misuse of battery may lead to leakage, heat generation or explosion. Battery may become hot during use. Battery temperature may exceed 25C (77F) even under normal operation and may cause burns or alter the shape of some materials.

SPECIFICATIONS

Rating Voltage	7.4V
Battery Capacity	850mAh
Discharge Rate	25C

DANGER

- Failure to follow instructions associated with this symbol risks injury or even death!
- If battery liquid enters the eye, immediately flush continuously with clean running water and seek medical treatment. Serious and permanent eye damage may occur.

⚠ WARNING

- Failure to follow instructions associated with this symbol risks injury or even death!
- Avoid battery liquid contact with skin and clothing.
  If contact occurs, remove contaminated clothing and wash skin thoroughly with water.

Before Use: Read and understand the battery and charger operating instructions before recharging.

⚠ DANGER

- ONLY use genuine charger unit for recharging brand LiPo batteries.
- ENSURE polarity is correct when plugging a battery into the charger unit.
- NEVER plug a battery directly into household outlets or cigarette lighters in cars!

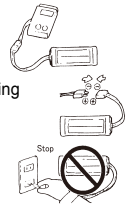

⚠ WARNING

- NEVER place a battery into water.
- IF you experience irregular noise, temperature or any leaking from your battery, stop using it immediately!
- KEEP battery away from exposed flame, high temperatures and humidity.

NOTE: Before any use of this battery, ensure that it is fully charged.

During use: Always monitor a battery while it's charging so you can react to any unexpected problems.

⚠ DANGER

- LiPo batteries are ONLY for use in R/C (radio control) models! Do NOT use them for any other purpose!
- NEVER disassemble or modify a battery!

⚠ WARNING

- Do NOT remove or cut the outer tube from battery!
- DISCONTINUE charging immediately if the charge time has been exceeded, even if the battery is not fully charged.

Battery is recyclable. At the end of its useful life, under various national, state or local laws, it may be illegal to dispose of a battery into the municipal waste stream. Check with your local solid waste officials for details in your area for recycling options or proper disposal.

⚠ WARNING

Before using, customers must read information below:

- Use caution when holding the battery. Do not drop or attempt to dismantle the battery or any parts of the battery.
- Do not mix usage of old and new cells or cells of different sizes, different chemistry and/or types in the same battery assembly.
- Do not heat or dispose of battery into fire, water and/or other liquids.
- Do not place the battery into microwave, washing machine and/or drying machine.
- Do not use a damaged battery (such as swollen, deformed, voltage is lower than 0.9V, destroyed, etc.)
- Do not place batteries near heating sources or expose to direct sunlight for long periods. Elevated temperatures may result in reduced battery life cycle.
- Do not short-circuit the battery's positive and negative terminals.
- Do not charge, discharge or store the battery above or below the battery specifications.
- Do not disassemble the battery.
- Before charging battery, ensure polarity is correct.
- Keep battery far away from easily flammable objects and children while charging.
- Do not charge when battery is hot to the touch. Allow battery to cool before recharging.
- Never leave batteries unattended while charging.
- Do not leave battery installed in your model while not in use. Do not charge the battery while installed in models.

XR2 Micro Radio

Step 1. Transmitter

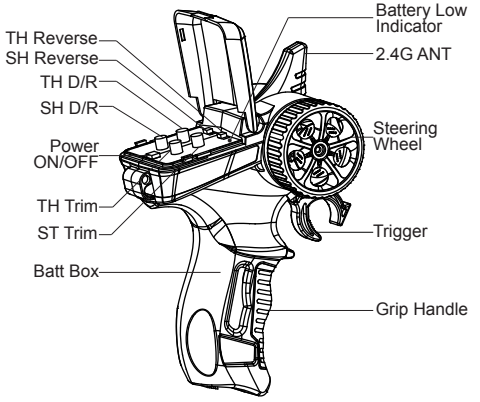

Description	Definition
2.4Ghz Antenna	Transmits signal to the model
Power ON/OFF	Turn the transmitter ON or OFF
Steering Wheel	Control direction (Left / Right)
Trigger	Controls speed (Forward / Brake / Backward)
TH Trim	Adjust the model to stop when theottle trigger is at stop position
ST Trim	Adjusts the model to run straight when steering wheel is at center position
TH Reverse Switch	Reverse direction when operating throttle trigger
SH Reverse Switch	Reverse direction when operating steering wheel
TH D/R	Adjusts the maximum throttle when throttle trigger is pulled
SH D/R	Adjusts the maximum steering when steering wheel is turned
Batt Box	Contains 4AA batteries to power the transmitter
Grip Handle	Hold securely when operating the vehicle
Battery Low Indicator	LED will flash when the battery is low. Replace immediately

Step 2. Receiver and Servo Connection

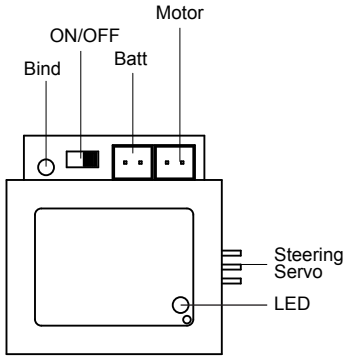

Step 3. Installing the Batteries

Remove the battery cover and install 4 new RC4WD AA batteries in the transmitter. Replace the battery cover.

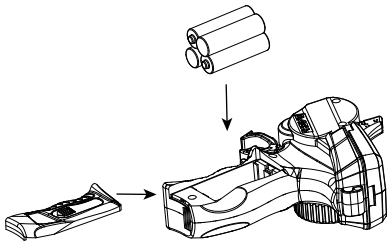

Warning: Please replace batteries when the power LED is solid red.

Step 4. Binding the Transmitter and Receiver

1 Turn on the receiver power. Press the SW switch. The receiver's LED should start flashing.

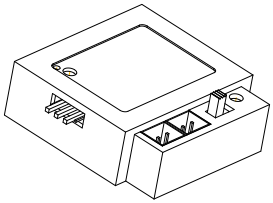

2 Turn on the transmitter.

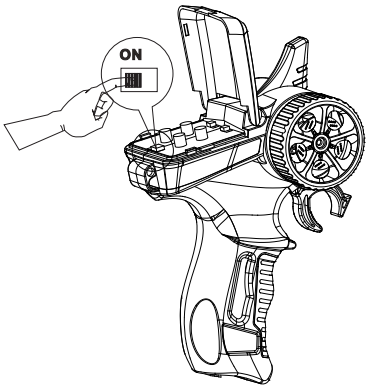

3 When the LED on the receiver becomes solid, the binding process is completed.

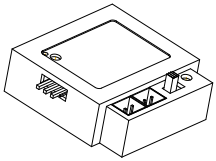

Step 6. Transmitter Adjustments

A. Throttle Trigger

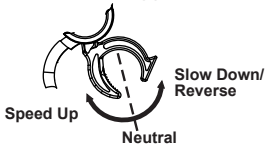

1. Push the trigger to the center position to stop.
2. Pull the trigger back to accelerate.
3. Push the trigger forward to go in reverse.

WARNING: 1) Keep the transmitter and receiver 40cm apart when operating.

2) Do not operate the radio system when the battery power is low.

B. Steering Wheel

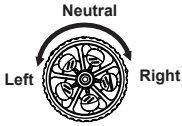

Turn the steering wheel to the left or right to let the vehicle turn left or right.

1/18 Gelande II Scale RTR Truck Electronic Manual

This is a step-by-step overview of your new truck's electrical items and how they connect.

1. Outcry II ESC (Z-E0078)

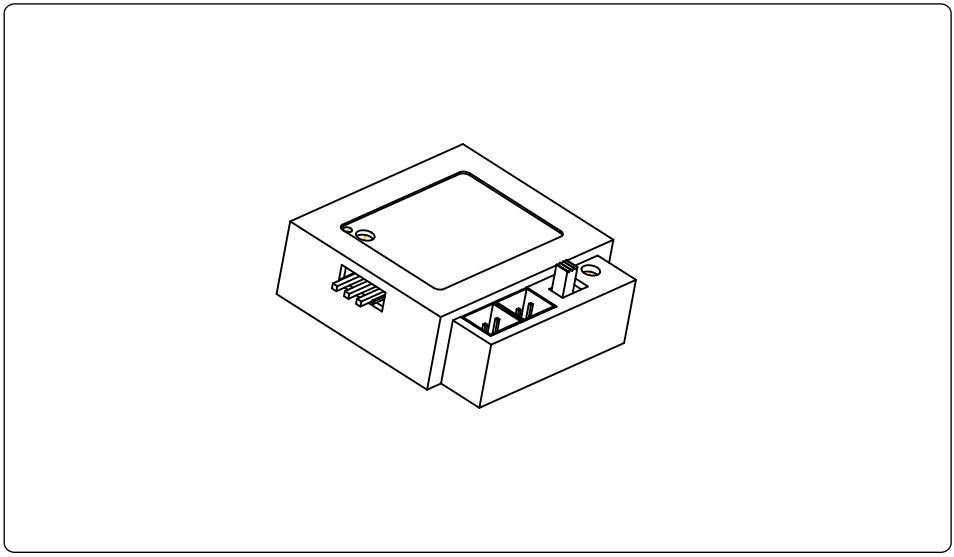

2. Connect the power cable with JST connector to power socket

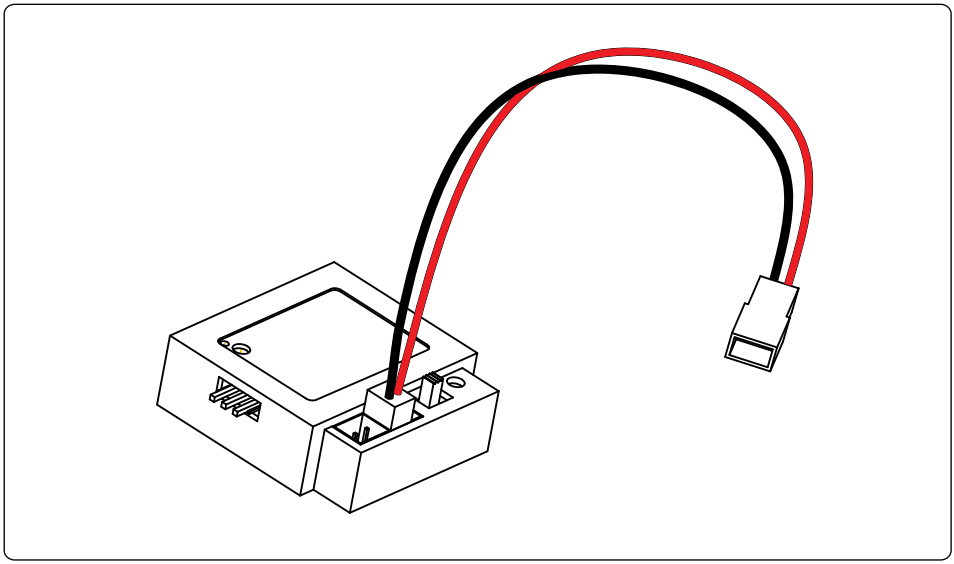

3. Connect motor to motor plug

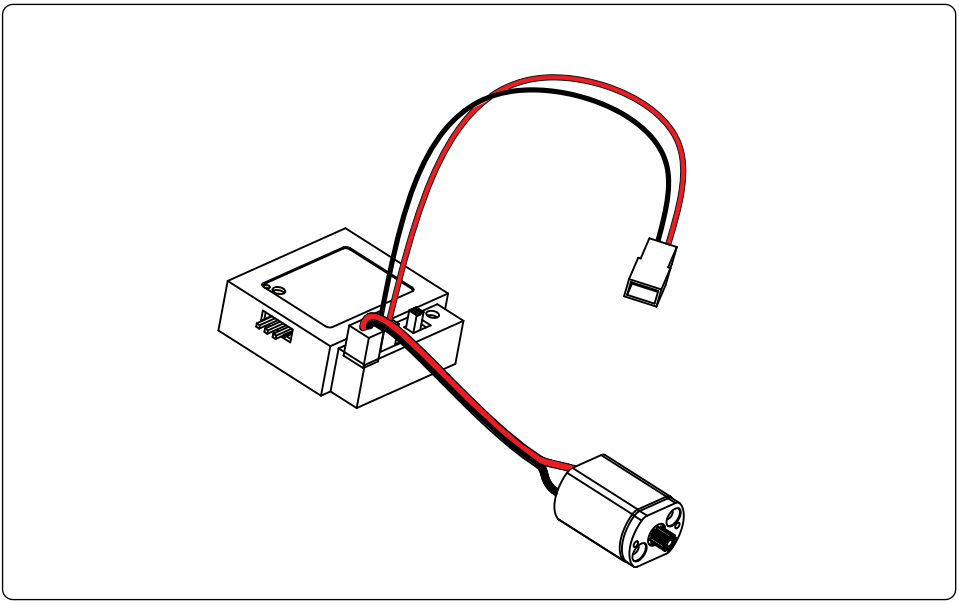

4. Connect servo to servo plug

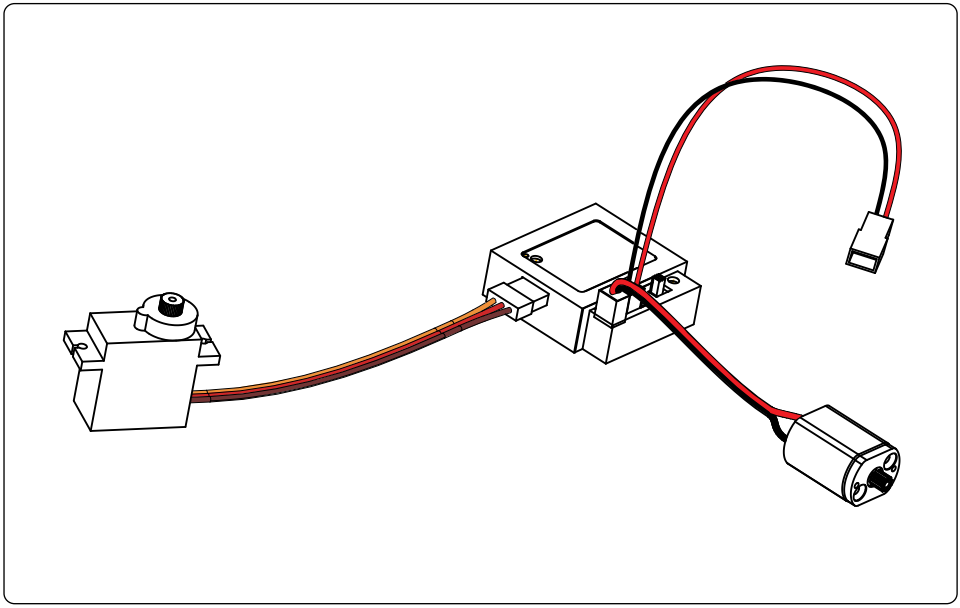

5. Shows the battery (Z-E0080) connected to the ESC

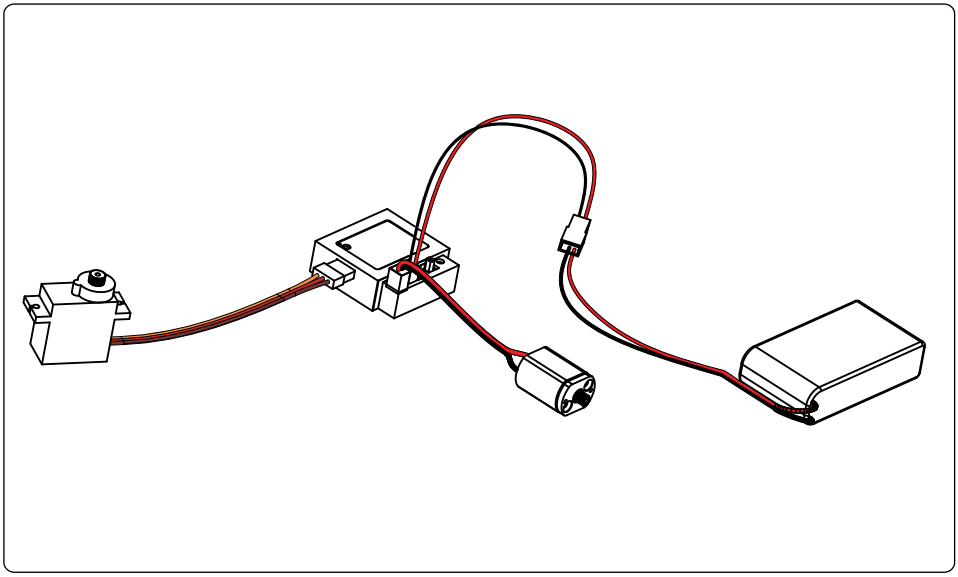

6. This final step shows all the items as they are connected on the truck

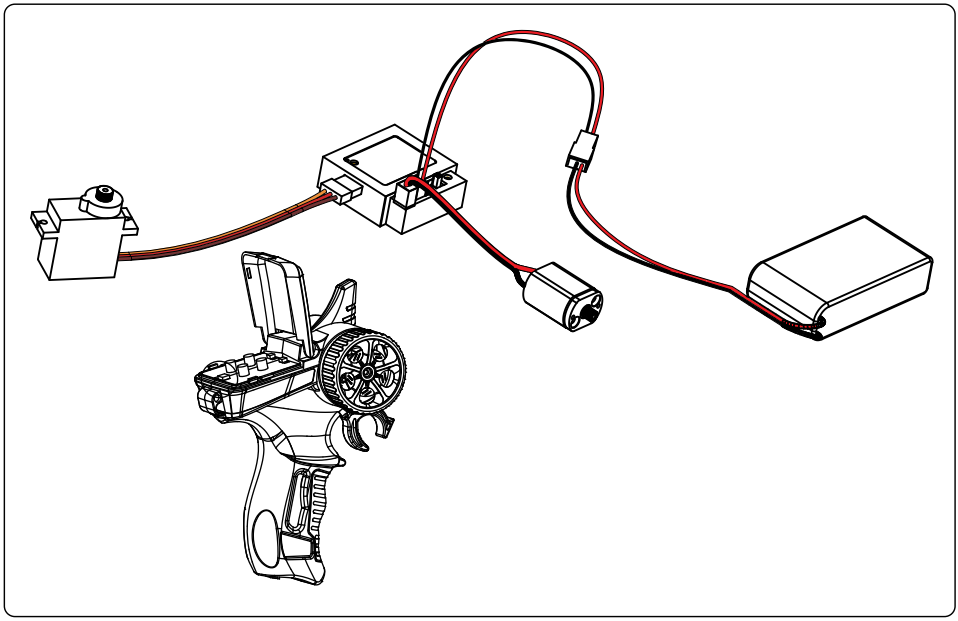

Time to get your new truck setup and running

If you have a Black Rock, look below.

If you have a BlackJack, turn to Page 14.

If you have a D90, turn to Page 18.

Step 1. Remove all items from box

Carefully remove all items from the box. Take care when pulling the truck from its tray as it may damage it. Be careful when removing the truck as it can easily fall out of the packaging.

Step 2. Read the instructions

Remove the battery and charger and read through the charging instructions as the battery will need to be charged before you can use your new truck.

Step 4. Installing the Batteries

Remove the battery cover and install 4 new RC4WD AA batteries in the transmitter. Replace the battery cover.

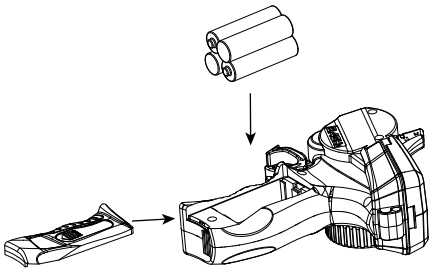

Warning: Please replace batteries when the power LED is solid red.

Step 5. Remove RC4WD Black Rock Body

Use the 2mm Hex Drivers, remove the four screws from the underside of the truck.

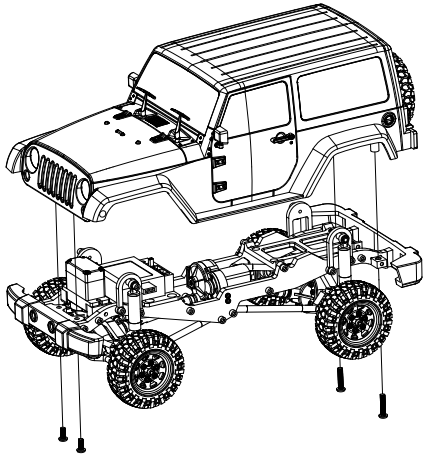

Step 6. Turn on the transmitter

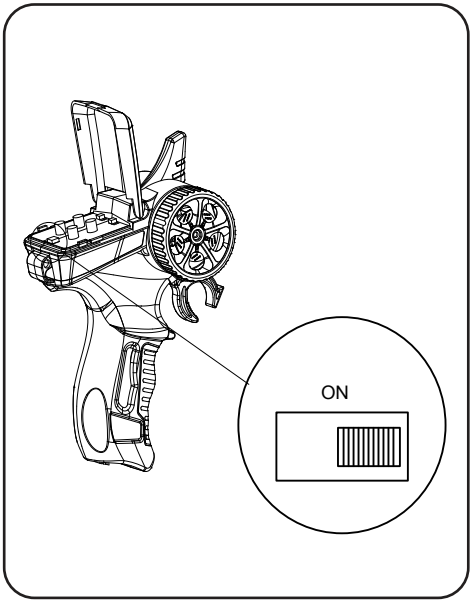

Step 7. install the Battery

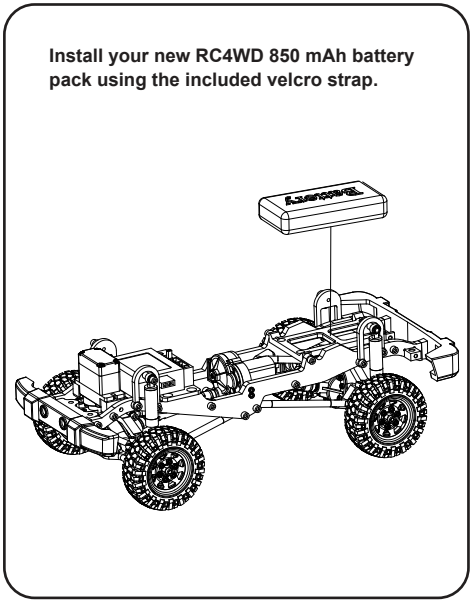

Step 8. Plug in Battery

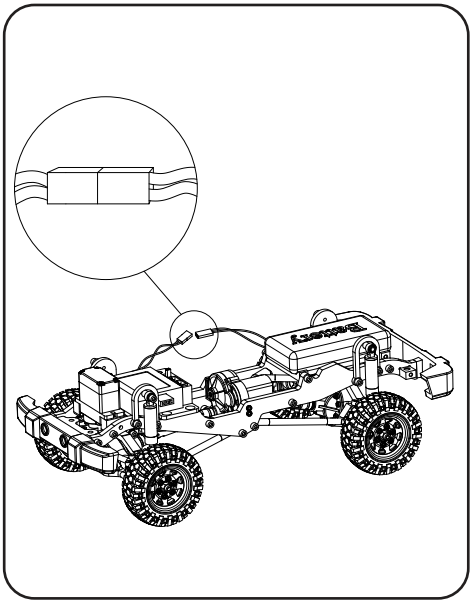

Step 9. Turn the switch to ON

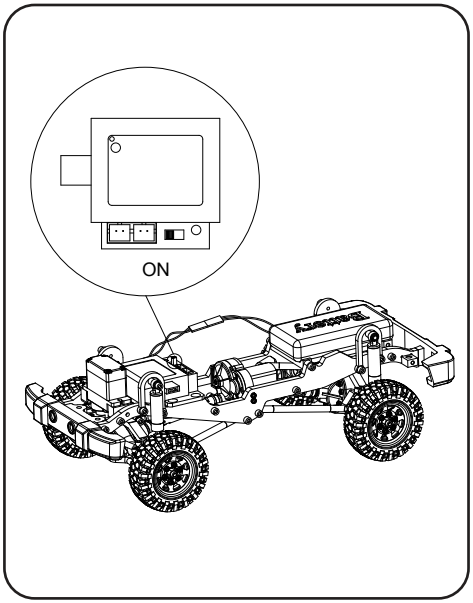

Step 10. Transmitter Adjustments

Get familiar with the steering and throttle.

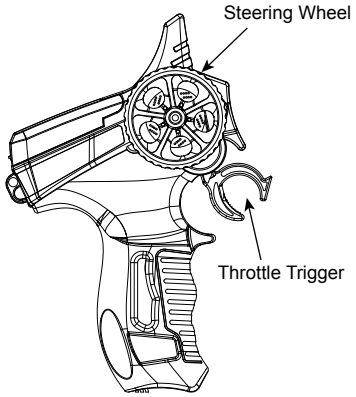

Step 11. Reinstall the body

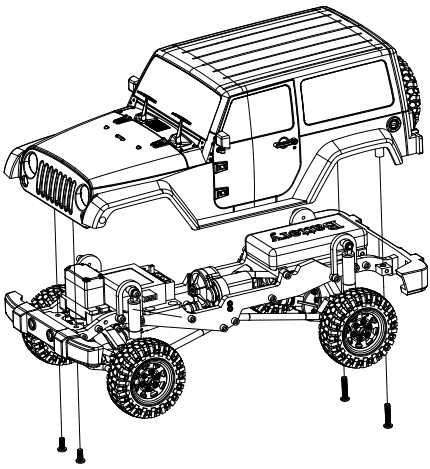

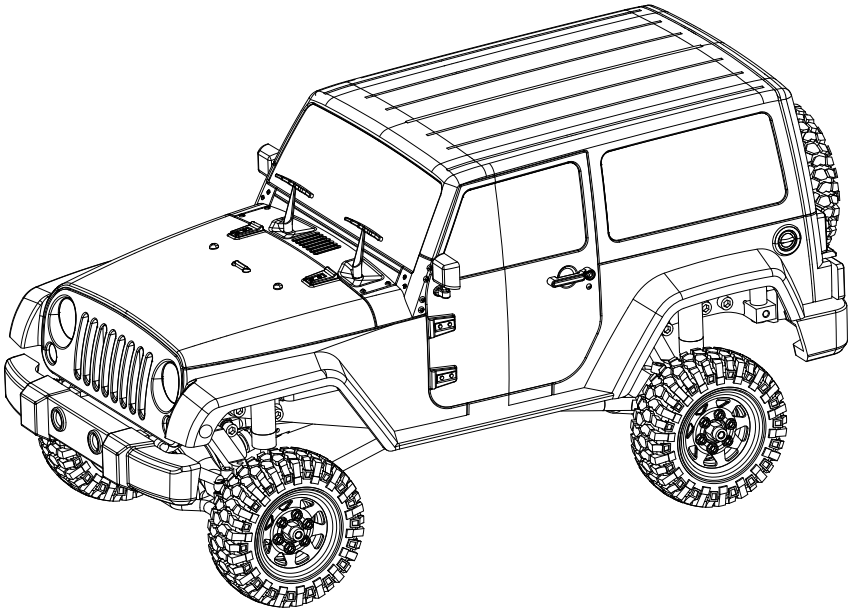

Replacement Parts

RC4WD 7.4V 850mAh 2S LiPo Battery (Z-E0080)
Rock Crusher 1.0" Micro Crawler Tires (Z-T0027)
2-in-1 Micro ESC + Receiver for XR2 Micro Radio (Z-E0078)
9G Analog Metal Gear Micro Servo (Z-E0077)
RC4WD 1/18 Black Rock Body Set (Z-B0113)
Stamped Steel 1.0" Stock Beadlock Wheels (Black) (Z-W0229)
Punisher Shafts 1/18 (42mm - 50mm / 1.57" - 1.96") 3mm Hole (Z-S1684)
Yota II 1/18 Cast Front and Rear Axle Set (Z-A0117)
The Ultimate Mini Scale Shocks (40mm) (Z-S1686)
FF-030 Micro Electric Motor (Z-E0079)
R5 1/18 Mini Transmission V2 (Z-U0036)

Time to get your new truck setup and running

Step 1. Remove all items from box

Carefully remove all items from the box. Take care when pulling the truck from its. tray as it may damage it. Be careful when removing the truck as it can easily fall out of the packaging.

Step 2. Read the instructions

Remove the battery and charger and read through the charging instructions as the battery will need to be charged before you can use your new truck.

Step 4. Installing the Batteries

Remove the battery cover and install 4 new RC4WD AA batteries in the transmitter. Replace the battery cover.

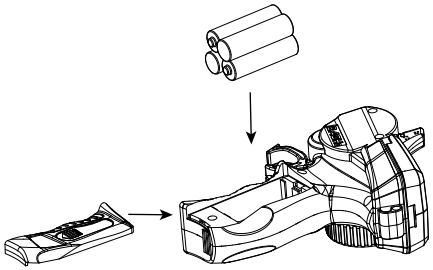

Warning: Please replace batteries when the power LED is solid red.

Step 5. Remove RC4WD BlackJack Body

Use the 2mm Hex Drivers, remove the four screws from the underside of the truck.

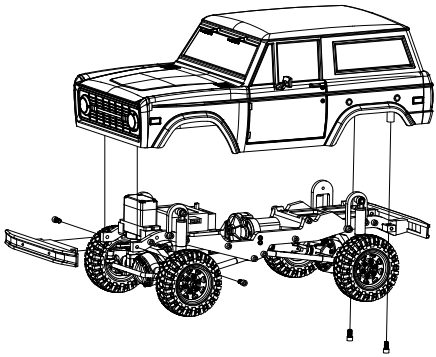

Step 6. Turn on the transmitter

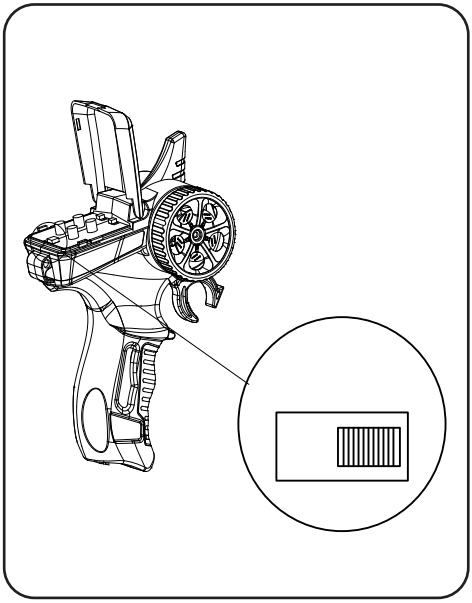

Step 7. install the Battery

Install your new RC4WD 850 mAh battery pack using the included velcro strap.

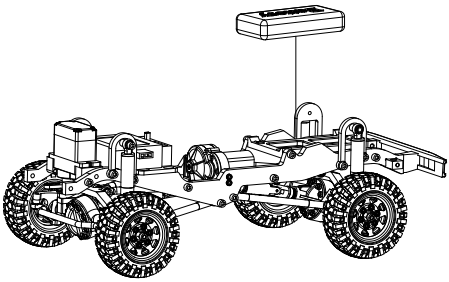

Step 8. Plug in Battery

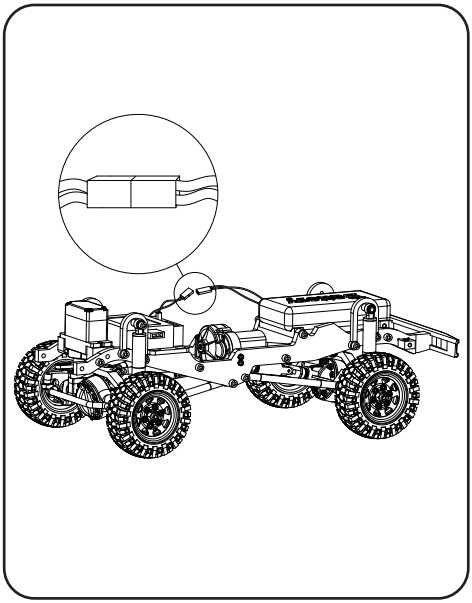

Step 9. Turn the switch to ON

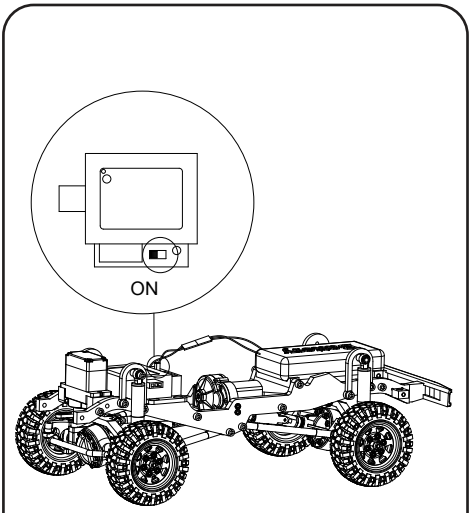

Step 10. Transmitter Adjustments

Get familiar with the steering and throttle.

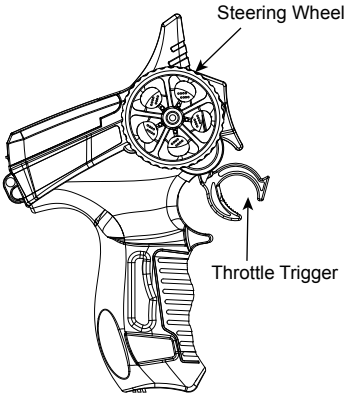

Step 11. Reinstall the body

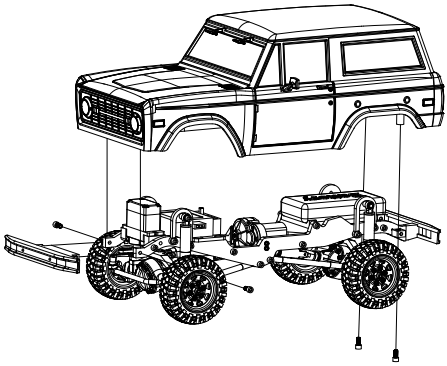

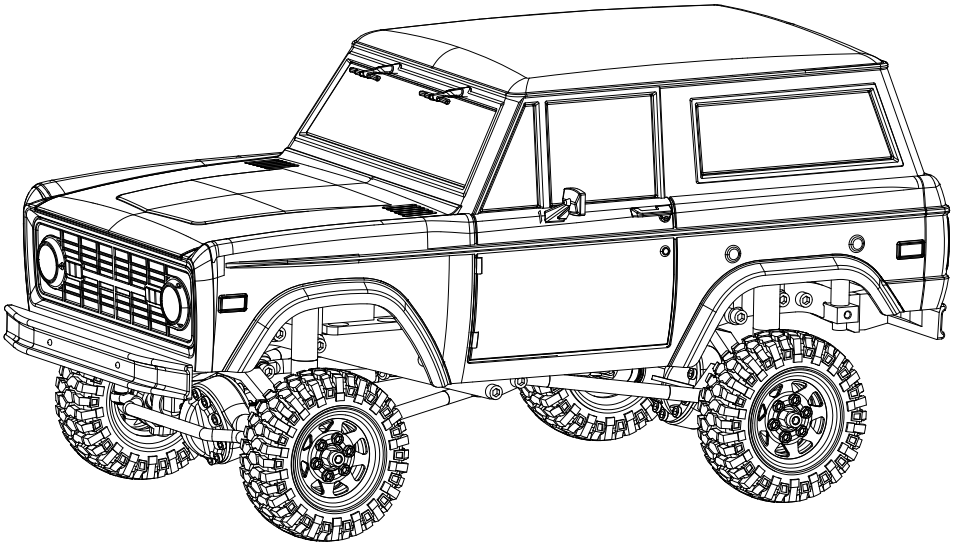

Replacement Parts

RC4WD 7.4V 850mAh 2S LiPo Battery (Z-E0080)
Dirt Grabber 1.0" Micro Crawler Tires (Z-T00142)
2-in-1 Micro ESC + Receiver for XR2 Micro Radio (Z-E0078)
9G Analog Metal Gear Micro Servo (Z-E0077)
RC4WD 1/18 Black Rock Body Set (Z-B0113)
Stamped Steel 1.0" Stock Beadlock Wheels (White) (Z-W0111)
Punisher Shafts 1/18 (42mm - 50mm / 1.57" - 1.96") 3mm Hole (Z-S1684)
Yota II 1/18 Cast Front and Rear Axle Set (Z-A0117)
The Ultimate Mini Scale Shocks (40mm) (Z-S1686)
FF-030 Micro Electric Motor (Z-E0079)
R5 1/18 Mini Transmission V2 (Z-U0036)

Time to get your new truck setup and running

Step 1. Remove all items from box.

Carefully remove all items from the box. Take care when pulling the truck from its tray as it may damage it. Be careful when removing the truck as it can easily fall out of the packaging.

Step 2. Read the instructions

Remove the battery and charger and read through the charging instructions as the battery will need to be charged before you can use your new truck.

Step 4. Installing the Batteries

Remove the battery cover and install 4 new RC4WD AA batteries in the transmitter. Replace the battery cover.

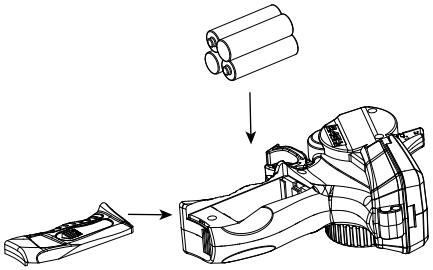

Warning: Please replace batteries when the power LED is solid red.

Step 5. Remove RC4WD D90 Body

Use the 2mm Hex Drivers, remove the four screws from the underside of the truck.

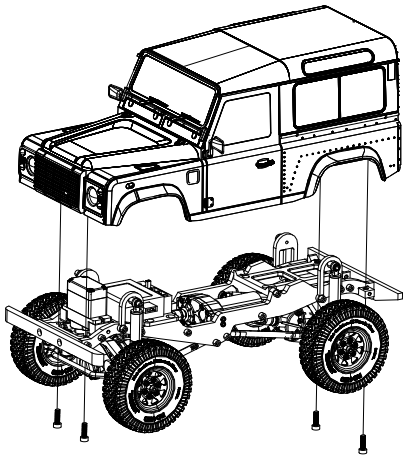

Step 6. Turn on the transmitter

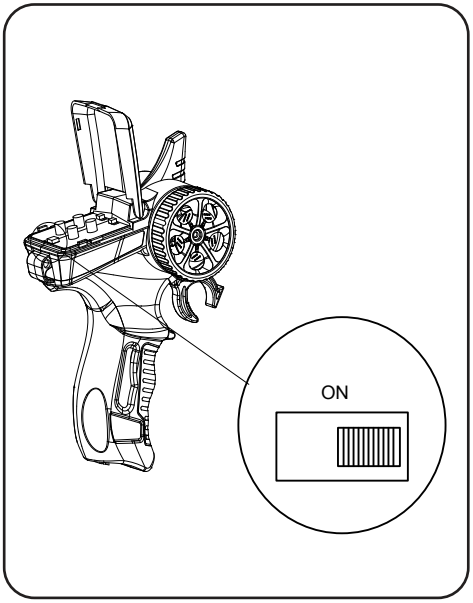

Step 7. install the Battery

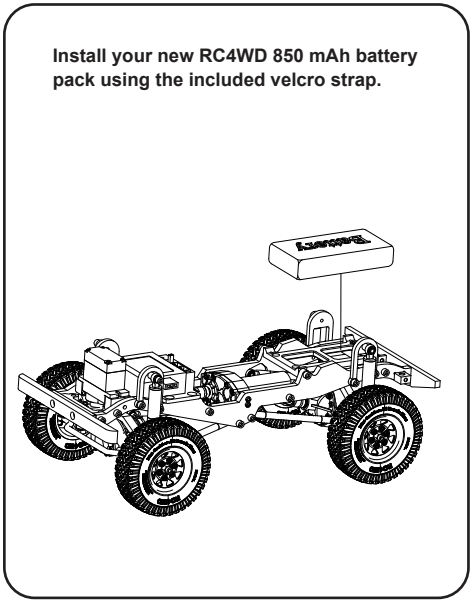

Step 8. Plug in Battery

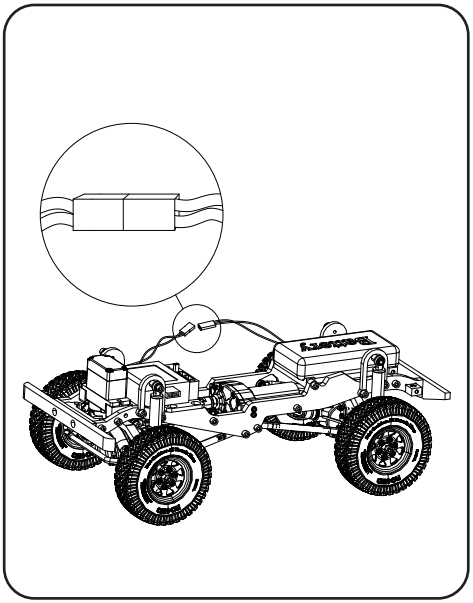

Step 9. Turn the switch to ON

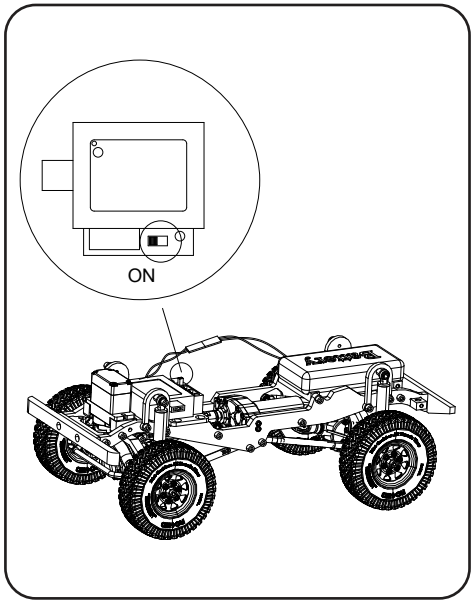

Step 10. Transmitter Adjustments

Get familiar with the steering and throttle.

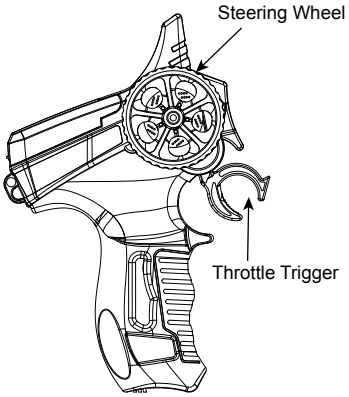

Step 11. Reinstall the body

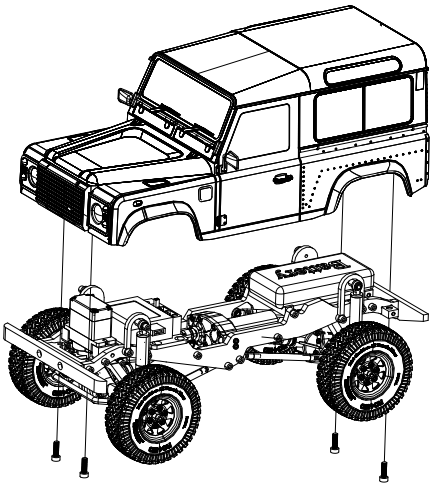

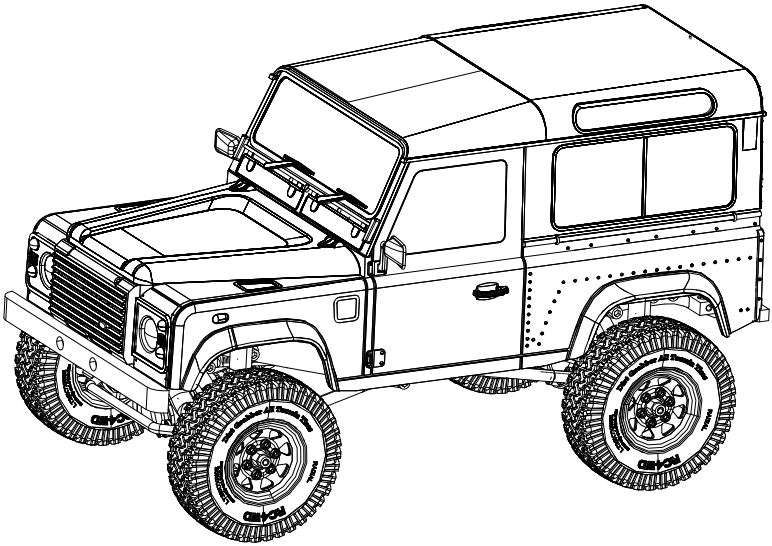

Go create an adventure and share it with us.
Make sure to use @rc4wd on Facebook and hashtag #rc4wd on Instagram.

Replacement Parts

RC4WD 7.4V 850mAh 2S LiPo Battery (Z-E0080)
Rock Crusher 1.0" Micro Crawler Tires (Z-T0027)
2-in-1 Micro ESC + Receiver for XR2 Micro Radio (Z-E0078)
9G Analog Metal Gear Micro Servo (Z-E0077)
RC4WD 1/18 Blackjack Body Set (Z-B0126)
Stamped Steel 1.0" Stock Beadlock Wheels (Chrome) (Z-W0263)
Punisher Shafts 1/18 (42mm - 50mm / 1.57" - 1.96") 3mm Hole (Z-S1684)
Yota II 1/18 Cast Front and Rear Axle Set (Z-A0117)
The Ultimate Mini Scale Shocks (40mm) (Z-S1686)
FF-030 Micro Electric Motor (Z-E0079)
R5 1/18 Mini Transmission V2 (Z-U0036)

Optional Parts

Rock Crusher 1.0" Micro Crawler Tires (Z-T0027)
Rok Lox 1.0" Micro Comp Tires (Z-T0028)
Rage 1.0" Beadlock Wheels (Z-W0061)
RC4WD Mickey Thompson Baja Claw TTC 1.0" Micro Crawler Tires (Z-T0067)
RC4WD Interco Super Swamper TSL/Bogger 1.0" Micro Crawler Tires (Z-T0069)
Chubby Mini 3 TON Scale Jack Stands (Z-S0731)
Metal Front Lamp Guards for 1/18 Gelande D90 (VVV-C0268)
Metal Side Window Guards for 1/18 Gelande D90 (VVV-C0270)
Rear Ladder for 1/18 Gelande D90 (Black) (VVV-C0281)
Rear Ladder for 1/18 Gelande D90 (Red) (VVV-C0282)
Front Window Roll Cage for 1/18 Gelande D90 (Black) (VVV-C0273)
Front Window Roll Cage for 1/18 Gelande D90 (Red) (VVV-C0274)
Metal Front Side Hood Diamond Plates for 1/18 Gelande D90 (VVV-C0269)
Side Body Guards for 1/18 Gelande D90 (Black) (VVV-C0275)
Side Body Guards for 1/18 Gelande D90 (Red) (VVV-C0276)
Expanded Side Body Panels for 1/18 Gelande D90 (VVV-C0272)
Roof Rack for 1/18 Gelande D90 (Black) (VVV-C0277)
Roof Rack with Light Pods for 1/18 Gelande D90 (Red) (VVV-C0280)
Roof Rack for 1/18 Gelande D90 (Red) (VVV-C0278)
Roof Rack with Light Pods for 1/18 Gelande D90 (Black) (VVV-C0279)
Spare Tire Holder for 1/18 Gelande D90 (VVV-C0271)
RC4WD Raceline Monster 1.0" Beadlock Wheels (Z-W0252)
Ballistic Fabrications Diff Cover for 1/18th Yota II (Fits Front or Rear Axle) (Z-S1813)
RC4WD ARB Diff Cover for 1/18 Yota II Axle (Red) (Z-S1822)
R5 1/18 Mini Transmission V2 (Z-U0036)

www.rc4wd.com

RC4WD
618 Blossom Hill Rd. Ste. 201
San Jose, CA 95123
Web: www.rc4wd.com - Email: support@rc4wd.com

100-0034