RC4WD

TRAIL FINDER 2 LWB

RC4WD TRAIL FINDER 2 "LWB" TRUCK KIT W/ CHEVROLET K10 SCOTTSDALE HARD BODY SET



Recommended Tools

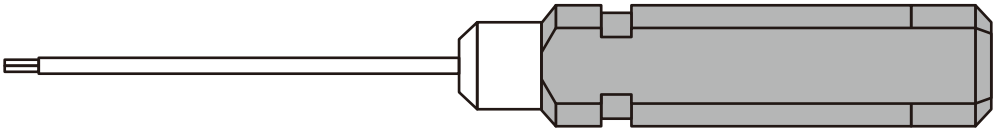

Hex Drivers (1.5mm, 2mm, 2.5mm)



Thread Lock

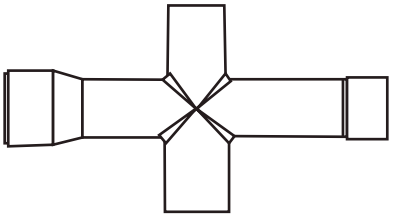

Cross Wrench

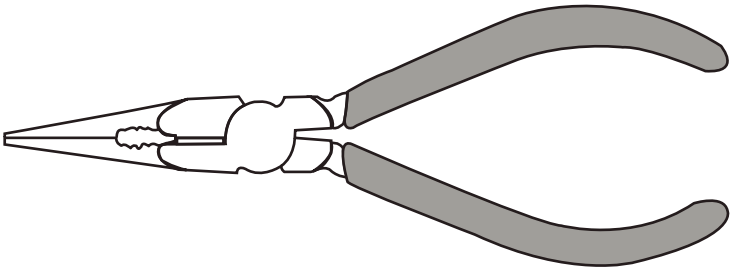

Long Nose Pliers

Tips for Assembly

Use good quality hex drivers to avoid stripping screw heads.

Use thread lock when putting metal screws into metal parts.

Note: Steps marked with an asterisk (*) require thread lock.

Use thread lock sparingly.

Do not over tighten screws otherwise you may strip the thread.

Warranty

RC4WD non-electrical products are warranted to be free of defects in materials and workmanship when new. Our limited warranty does not cover damages due to normal wear and tear, user error of assembly or installation, user modifications, user's failure to perform routine maintenance, addition of aftermarket parts or option parts. This warranty lasts 30 days after arrival for original purchaser.

In the event of a defect under this warranty, RC4WD will, at our discretion, replace the product, provided our inspection indicates that an original defect exists. RC4WD reserves the right to replace any product which is no longer available with a product of comparable value and function. If RC4WD determines the repair is not covered under warranty guidelines, we will contact you to discuss your options. If you have any questions, please contact us via email at support@rc4wd.com.

RC4WD warranties its electronics for 30 days from date of arrival. This covers all electrical items except items that are already noted on the individual product page.

Los productos no eléctricos RC4WD están garantizados como libres de defectos en materiales y mano de obra cuando son nuevos. Nuestra garantía limitada no cubre los daños debidos al desgaste normal, a errores de montaje o instalación por parte del usuario, a modificaciones del usuario, a la falta de mantenimiento rutinario por parte del usuario, a la adición de piezas de recambio o a piezas opcionales. Esta garantía dura 30 días después de la fecha de entrega para el comprador original.

En el caso de un defecto bajo esta garantía, RC4WD, a nuestra discreción, reemplazará el producto, siempre que nuestra inspección indique que existe un defecto original. RC4WD se reserva el derecho de sustituir cualquier producto que ya no esté disponible por otro de valor y función comparables. Si RC4WD determina que la reparación no está cubierta por la garantía, nos pondremos en contacto con usted para discutir sus opciones. Si tiene alguna pregunta, por favor contáctenos por correo electrónico a support@rc4wd.com.

RC4WD garantiza su electrónica por 30 días a partir de la fecha de entrega. Esto cubre todos los artículos eléctricos, excepto los que ya están anotados en la página del producto individual.

Les produits non électriques RC4WD sont garantis comme étant exempts de défauts de matériaux et de fabrication lorsqu'ils sont neufs. La garantie limitée ne couvre pas les dommages dus à l'usure normale, aux erreurs de montage ou d'installation de l'utilisateur, aux modifications apportées par l'utilisateur, au défaut d'entretien courant de l'utilisateur, à l'ajout de pièces de rechange ou de pièces optionnelles. Cette garantie dure 30 jours à compter de la date d'arrivée de l'acheteur initial.

En cas de défaut au titre de cette garantie, RC4WD remplacera, à notre discrétion, le produit, à condition que notre inspection indique qu'il s'agit d'un défaut d'origine. RC4WD se réserve le droit de remplacer tout produit indisponible par un produit de valeur et de fonction comparables. Si RC4WD détermine que la réparation n'est pas couverte par les directives de garantie, nous vous contacterons pour discuter des possibilités qui s'offrent à vous. Si vous avez des questions, veuillez nous contacter par courriel à support@rc4wd.com.

RC4WD garantit ses appareils électroniques pendant 30 jours à compter de la date d'arrivée. Cette garantie couvre tous les articles électriques, à l'exception de ceux qui sont déjà mentionnés sur la page de chaque produit.

Alle RC4WD, nicht elektrischen Produkte“ sind garantiert frei von Materialfehlern durch die Produktion und Verarbeitung. Die Garantie deckt nicht Schäden aufgrund normaler Abnutzung, Benutzerfehler bei der Montage oder Installation, Änderungen durch den Benutzer, unterlassen der routinemäßigen Wartung durch den Benutzer, hinzufügen von Fremdteilen oder Optionsteile.Diese Garantie beträgt 30 Tage nach Kauf und Erhalt der Ware durch den Käufer. Im Falle eines Mangels im Rahmen dieser Garantie, wird RC4WD nach ermessen und sofern nach einer Kontrolle ein ursprünglicher Defekt vorliegt, das Produkt austauschen.

RC4WD behält sich das Recht vor, Produkte die nicht mehr erhältlich sind, mit einem gleichwertigem Produkt mit vergleichbarer Funktion zu tauschen.

Wenn die Reklamation nicht mehr unter der Garantie fällt, wird Sie RC4WD für weitere Lösungen kontaktieren. Bei Fragen kontaktieren Sie uns bitte per E-Mail unter support@rc4wd.com.

Instruction Manual Symbols Key


Apply Thread Lock


Attention



Build Right and Left



Build Front and Rear



Repeat or Build Multiple

Tips for Assembly

*Keep all hardware bags sealed until they are required for the corresponding assembly step.

*Excessive force can damage screw heads, strip threads, or damage the mounting holes. Use appropriate torque and take care not to force screws during assembly.

*Use high-quality hex drivers to prevent damage or stripping of screw heads.

*Use medium (blue) thread lock

Step 1

X4

150-0061
Steel Button Head
Cap Screws M3 x 6mm
Z-S0651

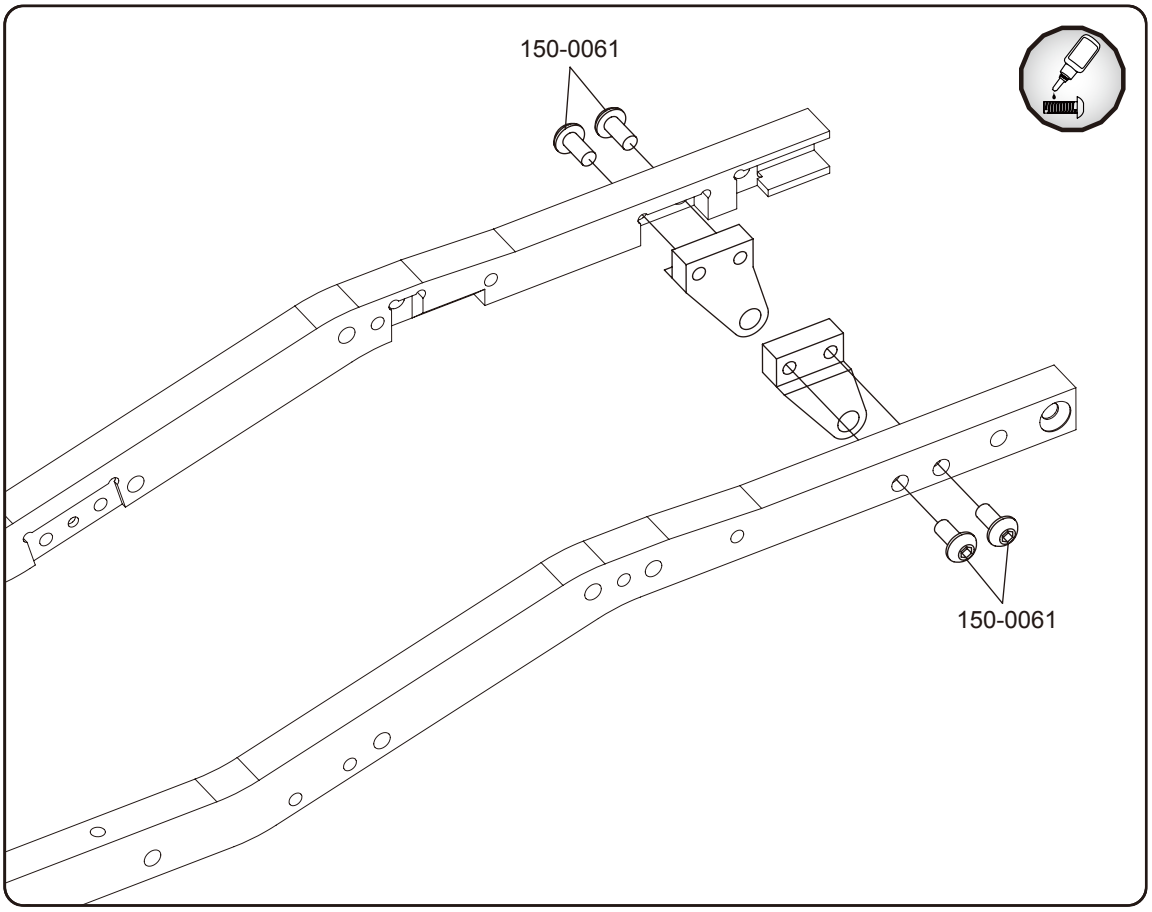

Step 2

X8

150-0062
Steel Button Head Cap
Screws M3 x 8mm
Z-S0652

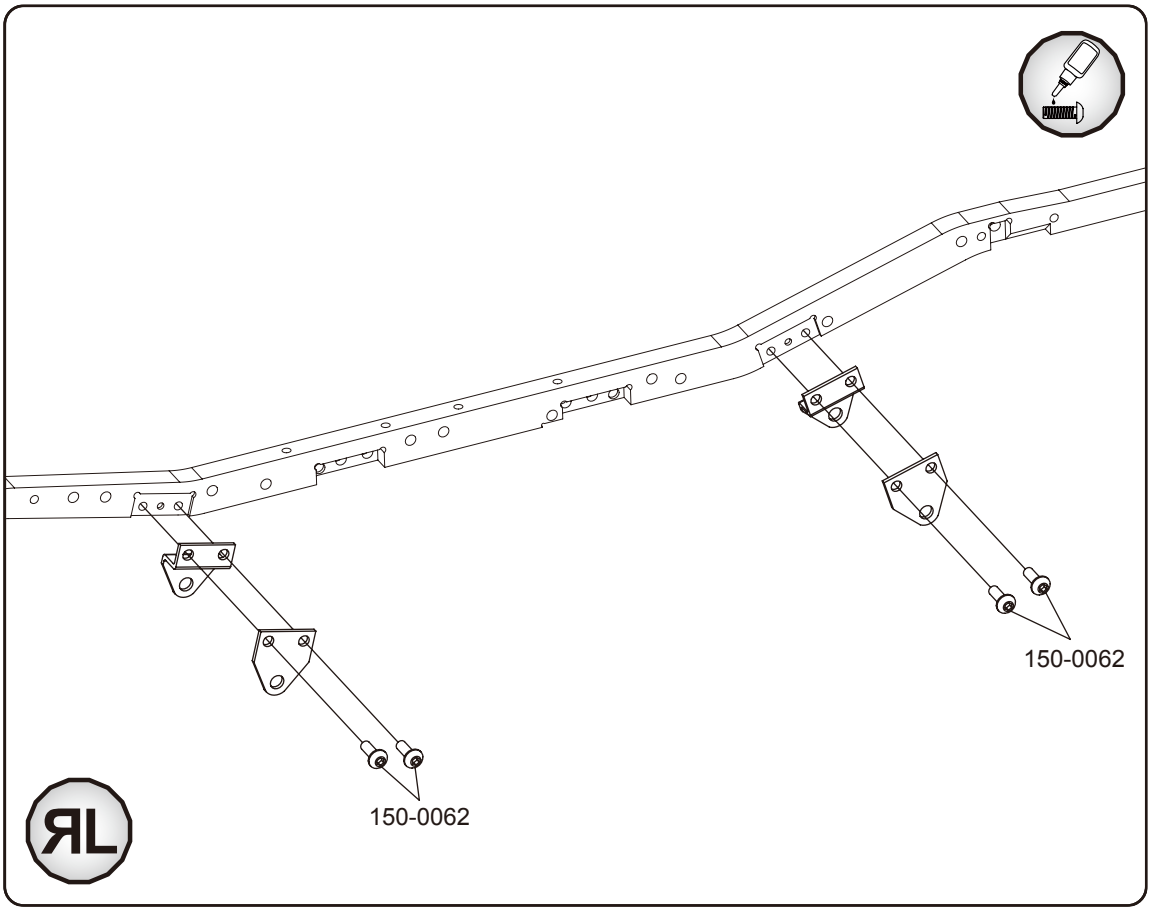

Step 3

X4

Button Head Self Tapping Screws M3 X 14mm (Black)

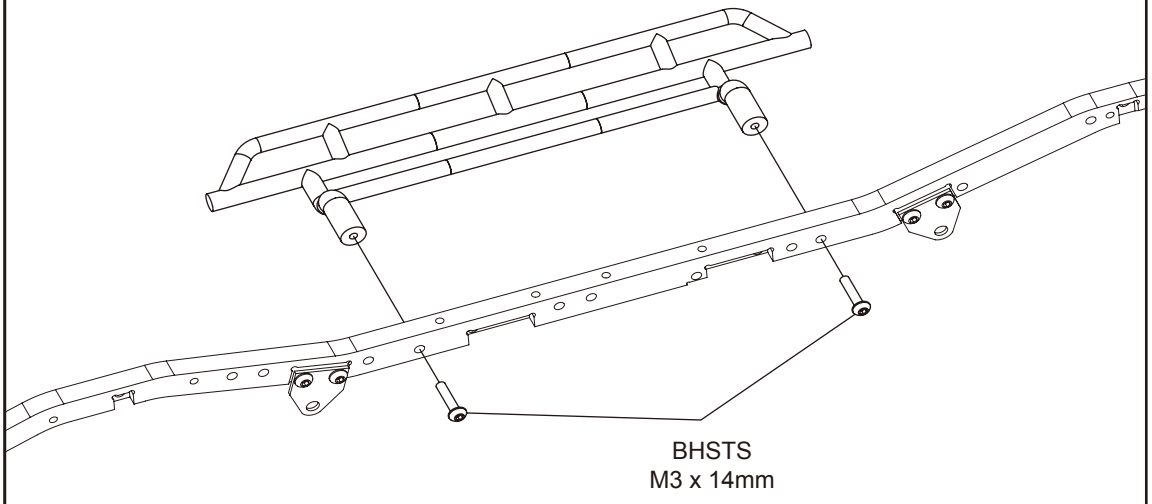

Step 4

X4

175-0007
Nylock Nuts M3 (Black)
Z-S0629

X4

150-0288
Leaf Spring Shoulder Screws (Black)
Z-S0275

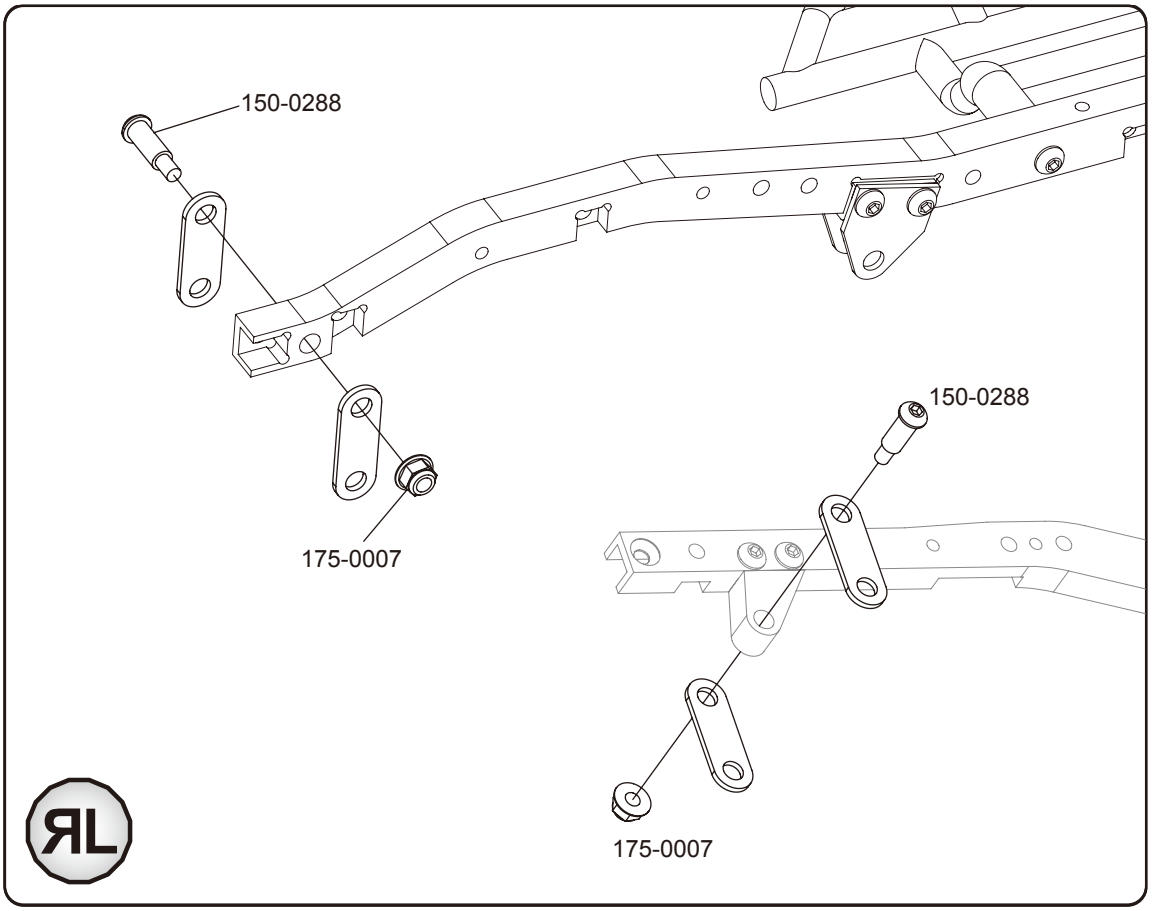

Step 5

X2

150-0064
Steel Button Head Cap
Screws M3 x 12mm
Z-S0654

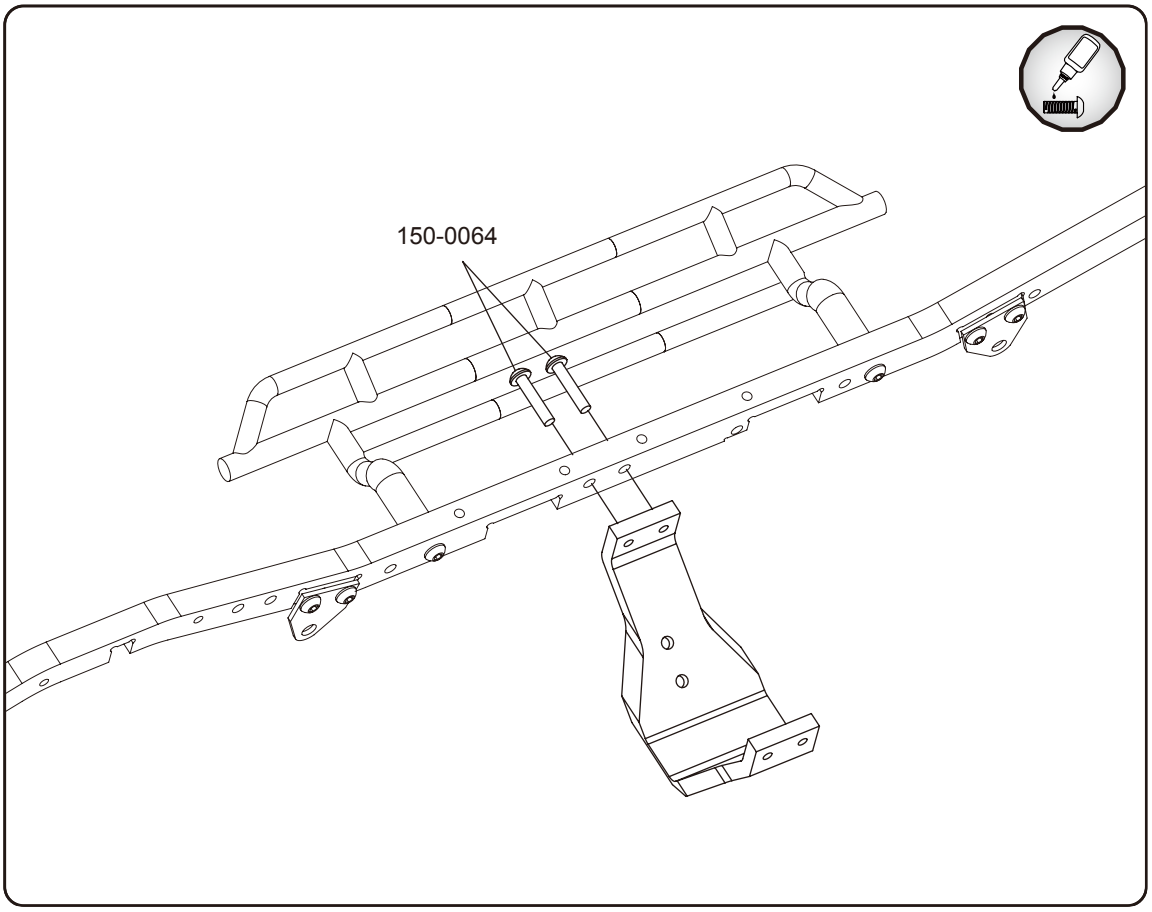

Step 6

X1

150-0062
Steel Button Head Cap
Screws M3 x 8mm
Z-S0652

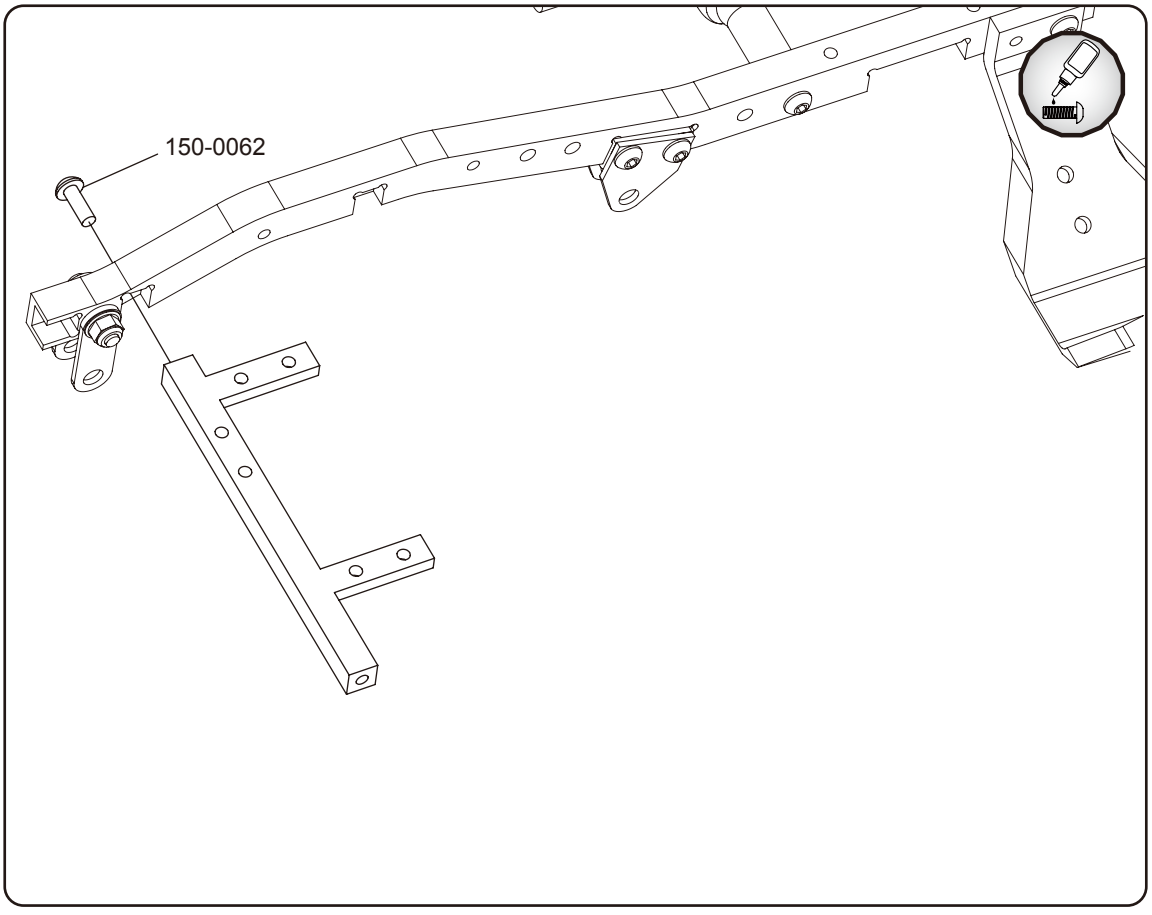

Step 7

X2

150-0062
Steel Button Head Cap
Screws M3 x 8mm
Z-S0652

X1

150-0065
Steel Button Head Cap
Screws M3 x 14mm
Z-S0655

X1

150-0063
Steel Button Head Cap
Screws M3 x 10mm
Z-S0653

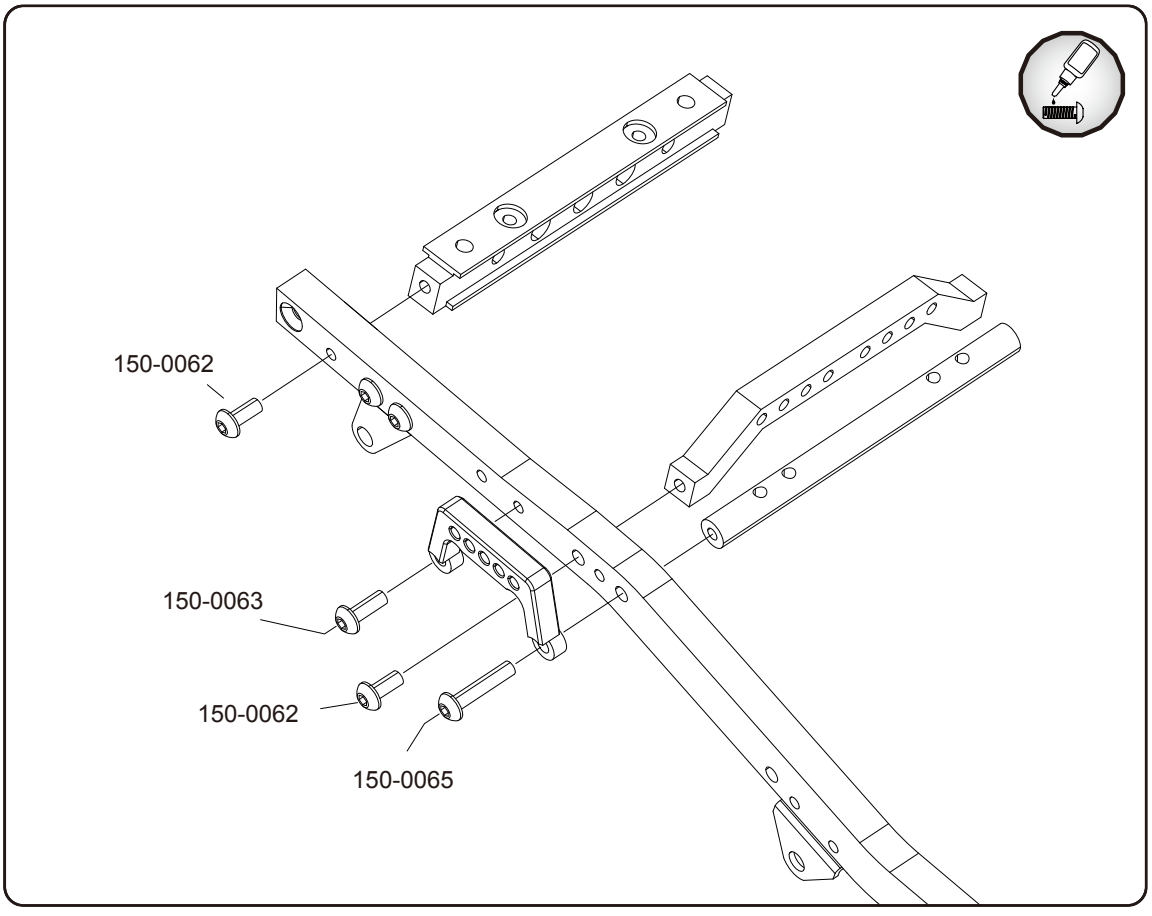

Step 8

X3

150-0063
Steel Button Head Cap
Screws M3 x 10mm
Z-S0653

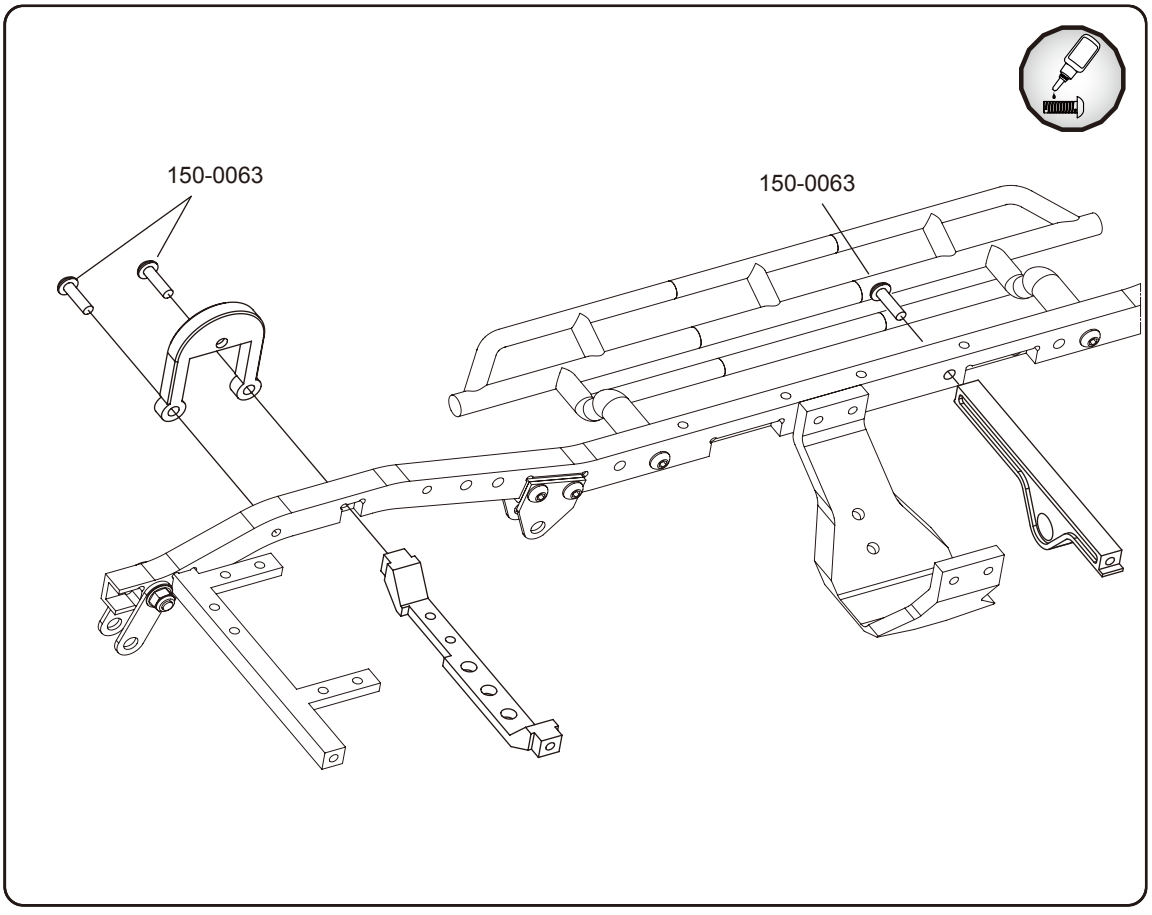

Step 9

X4

150-0258
Button Head Self
Tapping Screws
M3 X 12mm (Black)
Z-S1691

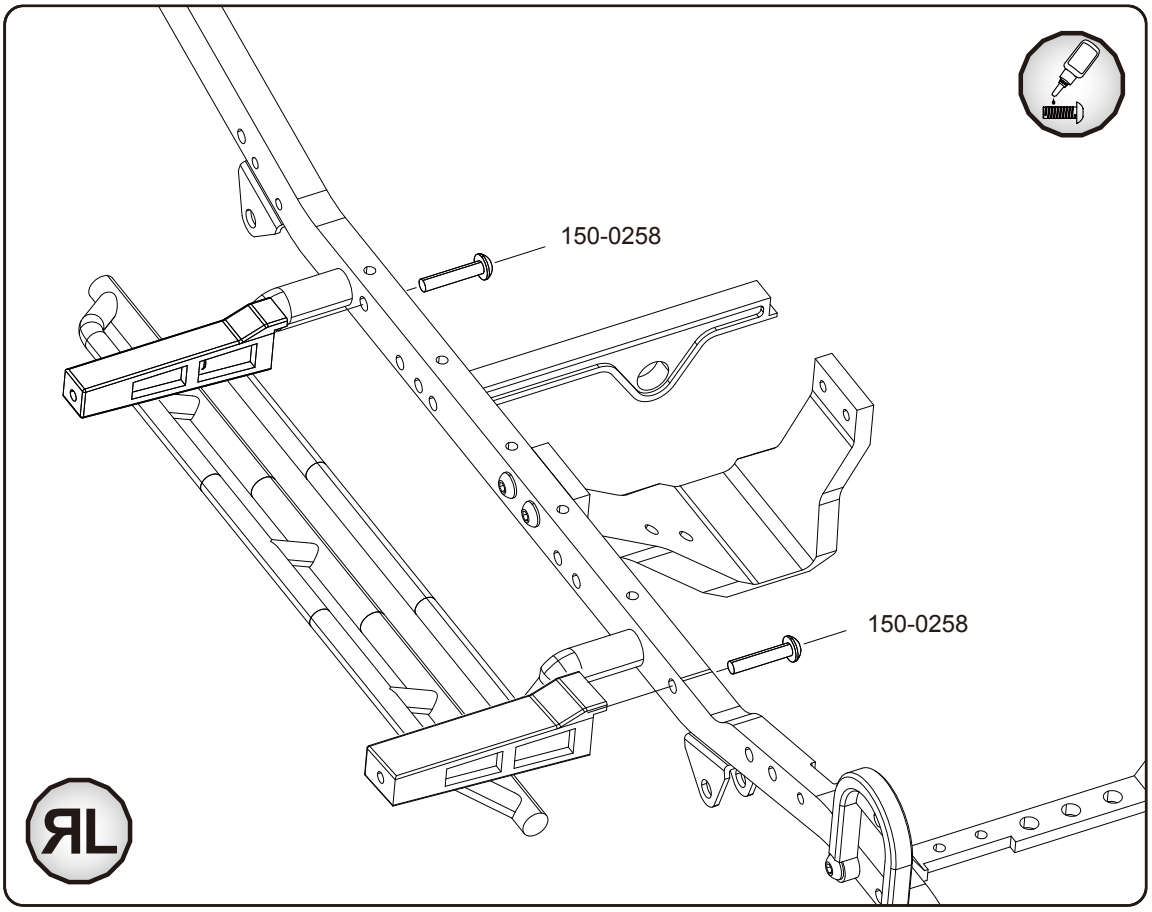

Step 10

X1

150-0202
M3 Driveshaft
Screw Pin
Z-S0804

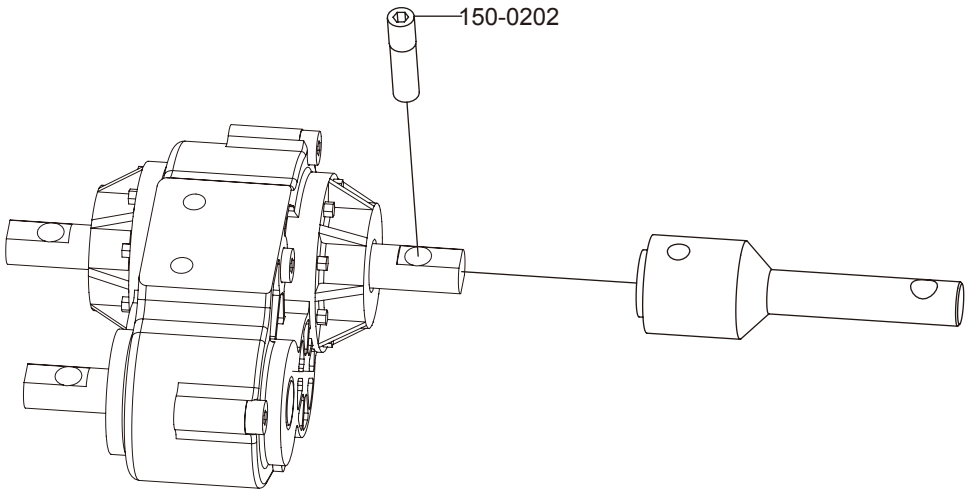

Step 11

X2

150-0100
Steel Flat Head
Socket Cap Screw
M3 x 8mm
Z-S0649

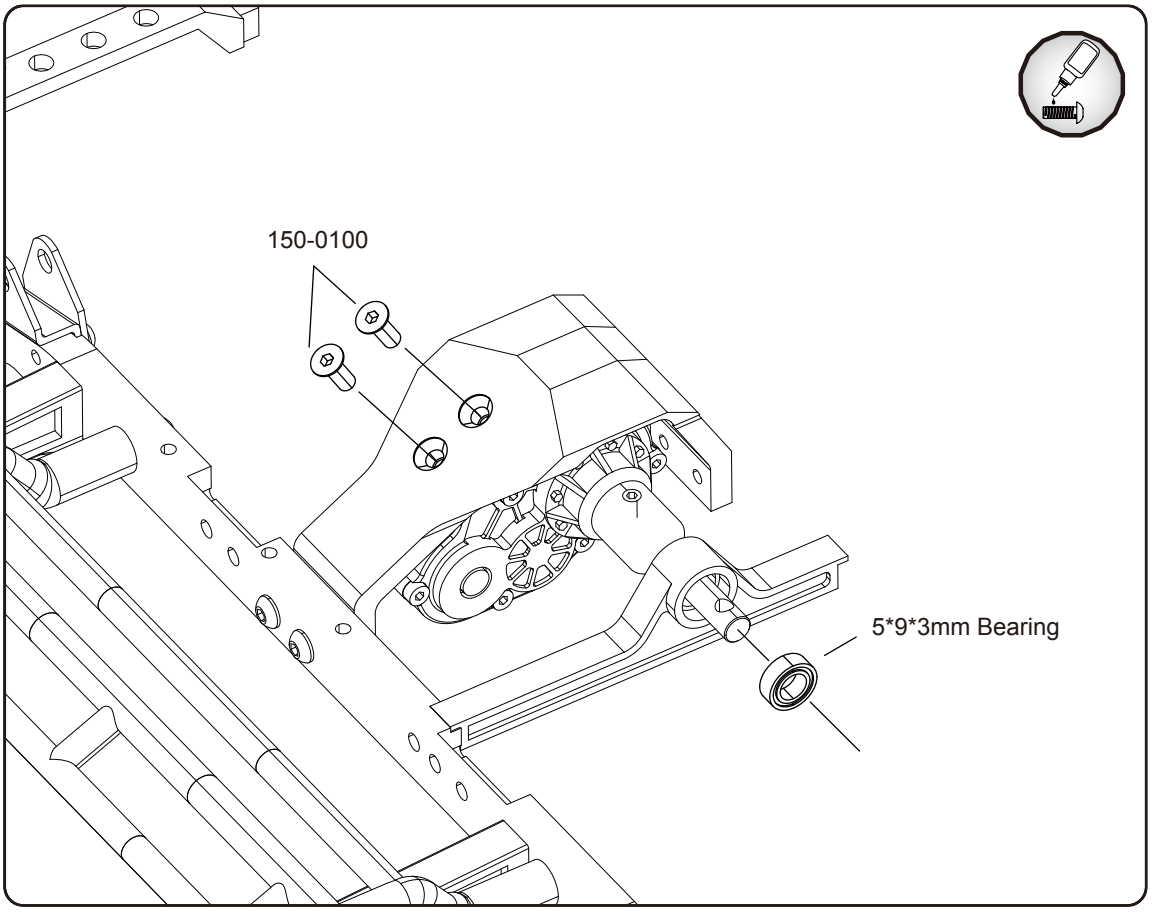

Step 12

X2

150-0062
Steel Button Head Cap
Screws M3 x 8mm
Z-S0652

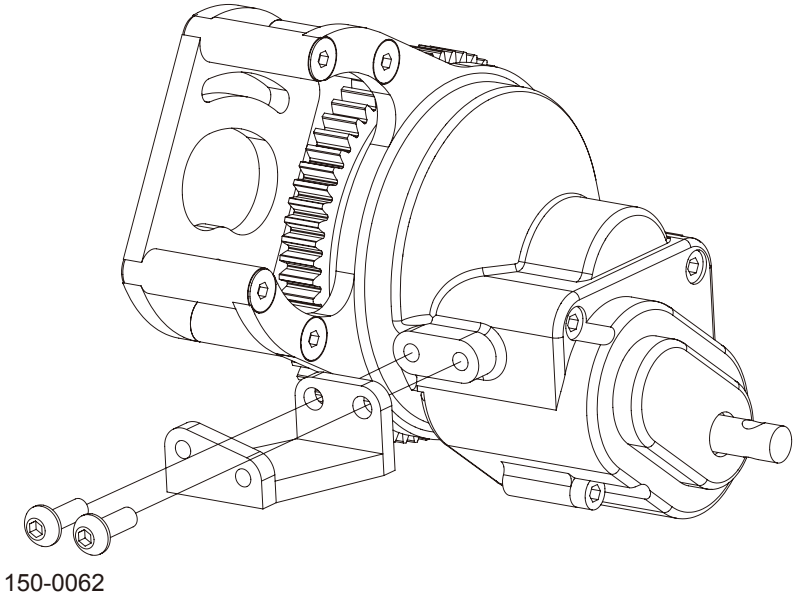

Step 13

X2

150-0100
Steel Flat Head Socket
Cap Screw M3 x 8mm
Z-S0649

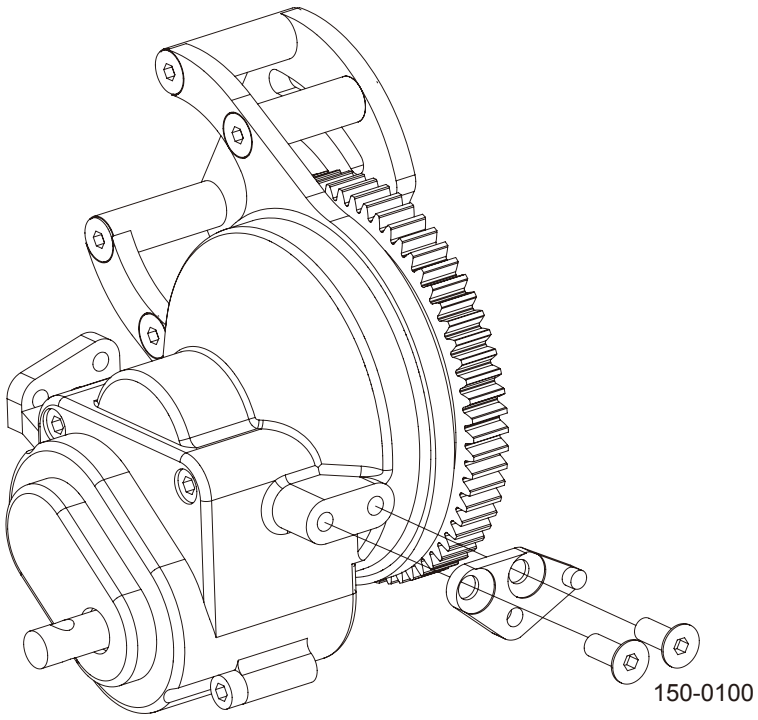

Step 14

X1

150-0202
M3 Driveshaft
Screw Pin
Z-S0804

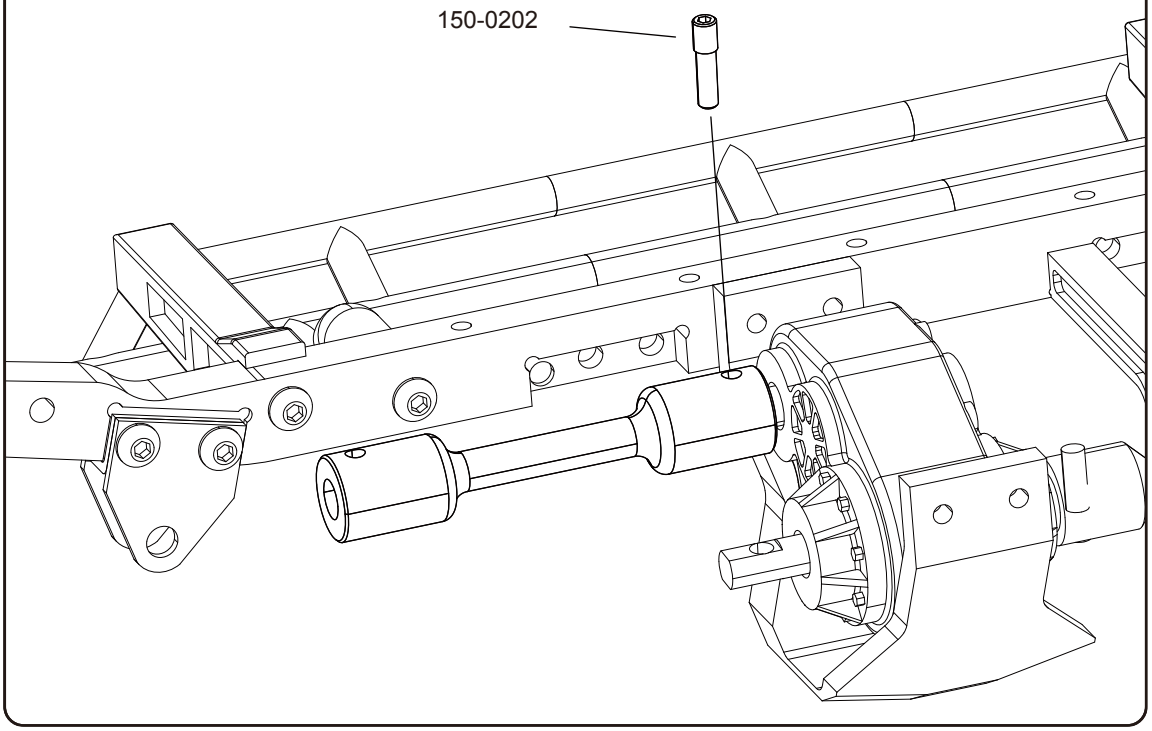

Step 15

X1

150-0063
Steel Button Head Cap
Screws M3 x 10mm
Z-S0653

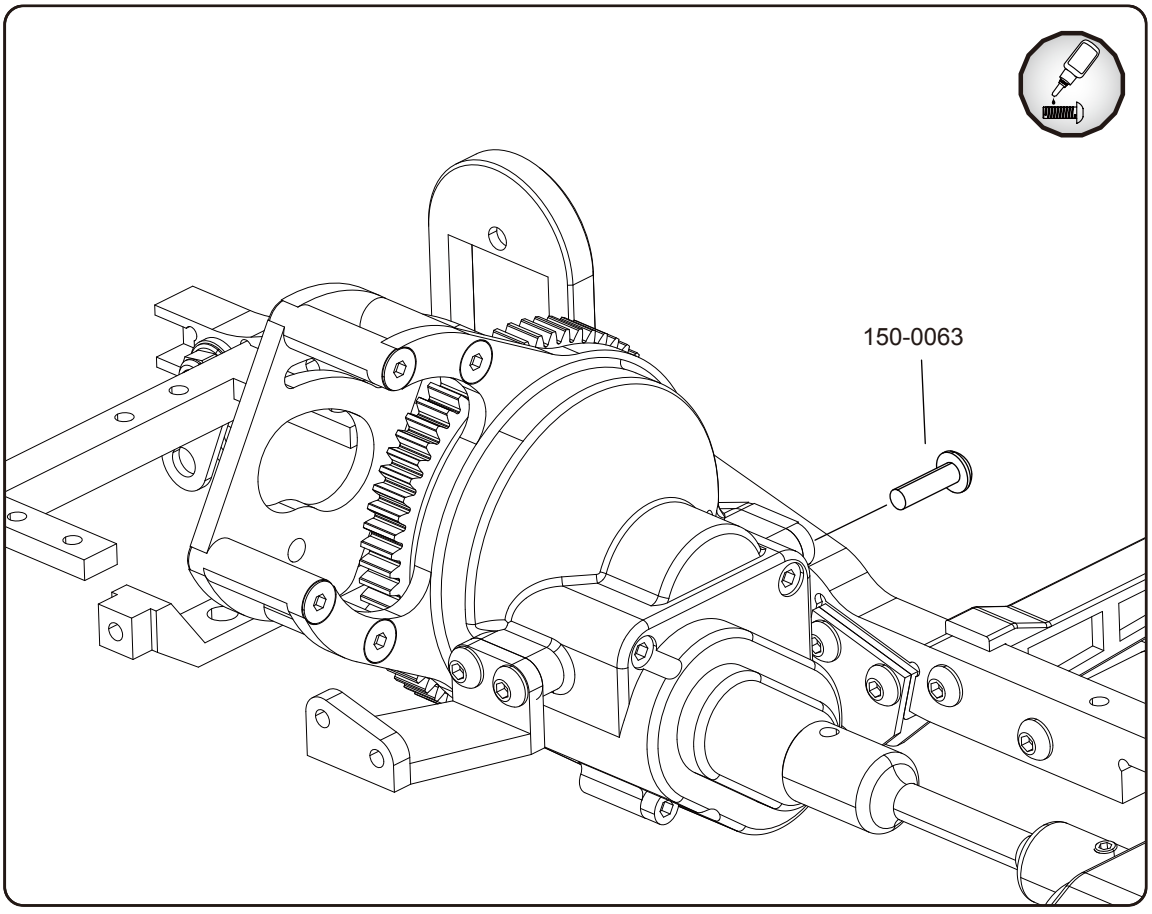

Step 16

X1

150-0202
M3 Driveshaft
Screw Pin
Z-S0804

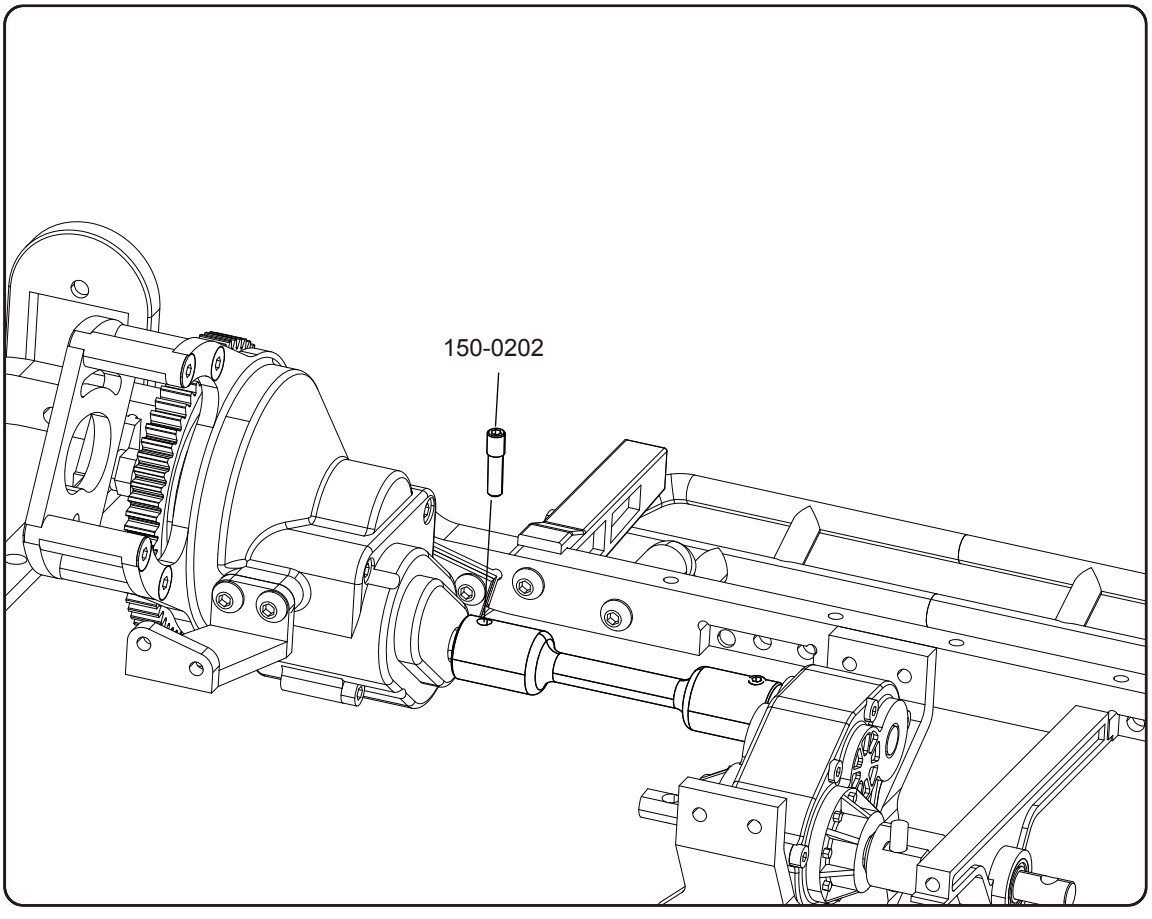

Step 17

X1

150-0062
Steel Button Head Cap
Screws M3 x 8mm
Z-S0652

X4

150-0063
Steel Button Head Cap
Screws M3 x 10mm
Z-S0653

X2

150-0064
Steel Button Head Cap
Screws M3 x 12mm
Z-S0654

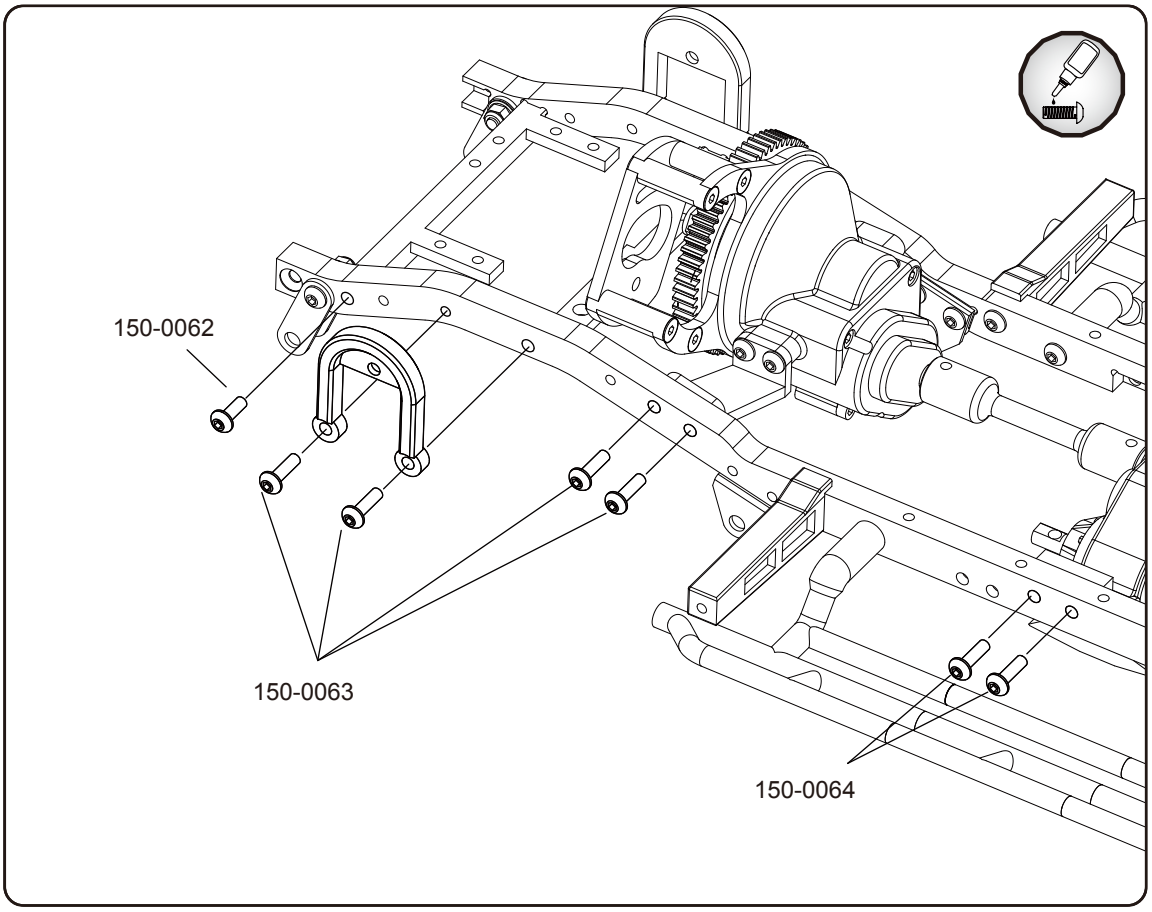

Step 18

X2

150-0062
Steel Button Head Cap
Screws M3 x 8mm
Z-S0652

X1

150-0063
Steel Button Head Cap
Screws M3 x 10mm
Z-S0653

X1

150-0065
Steel Button Head Cap
Screws M3 x 12mm
Z-S0654

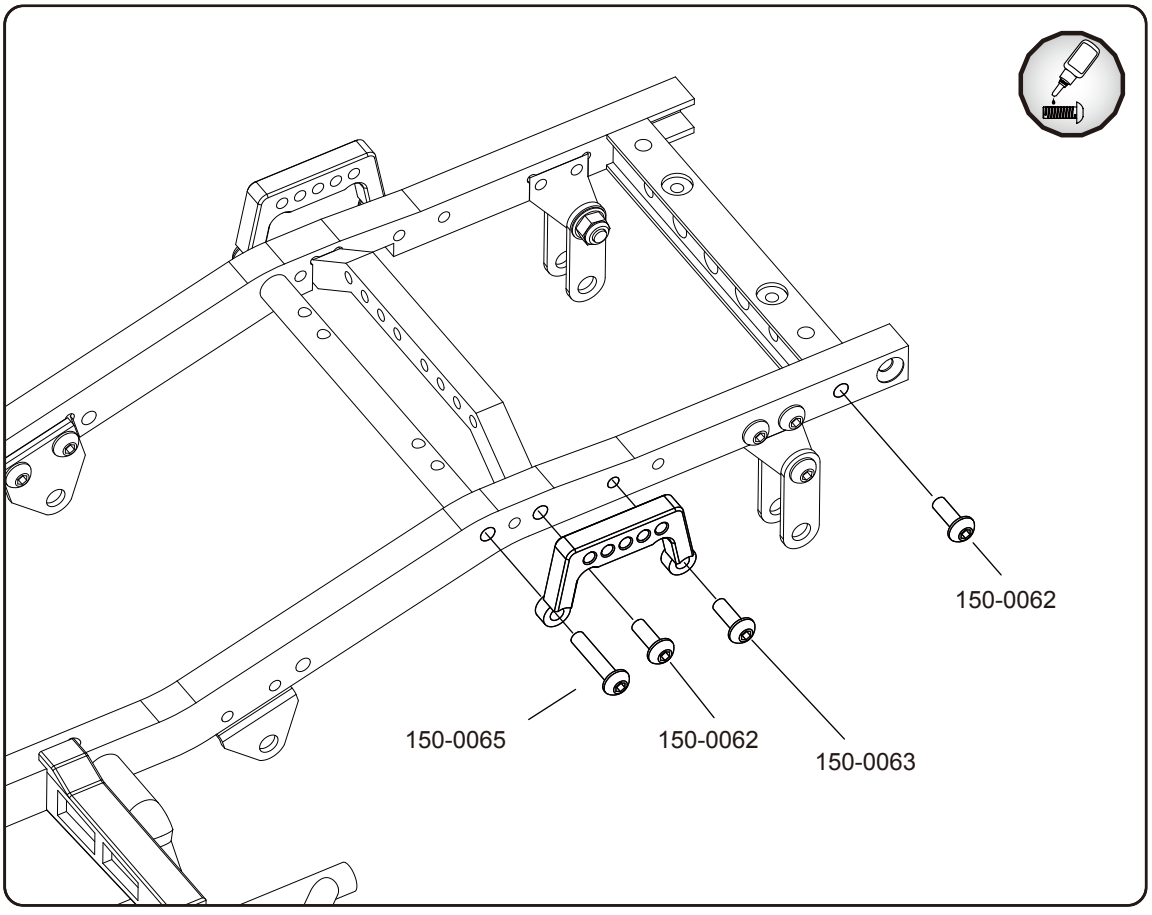

Step 19

X2

150-0062
Steel Button Head Cap Screws M3 x 8mm
Z-S0652

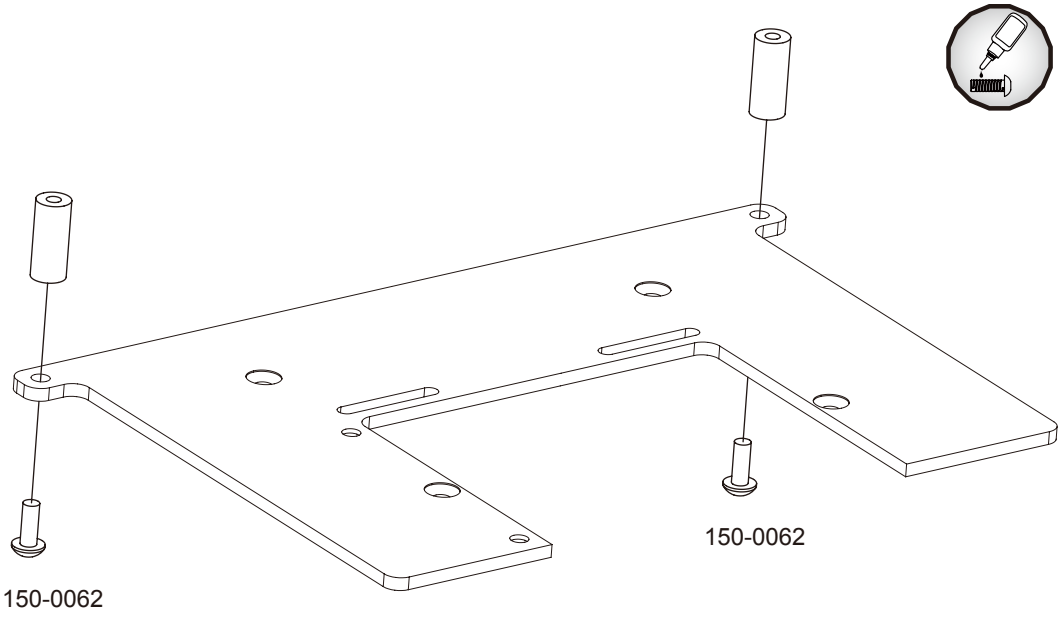

Step 20

X4

150-0099
Steel Flat Head Socket Cap Screw M3 x 6mm
Z-S0648

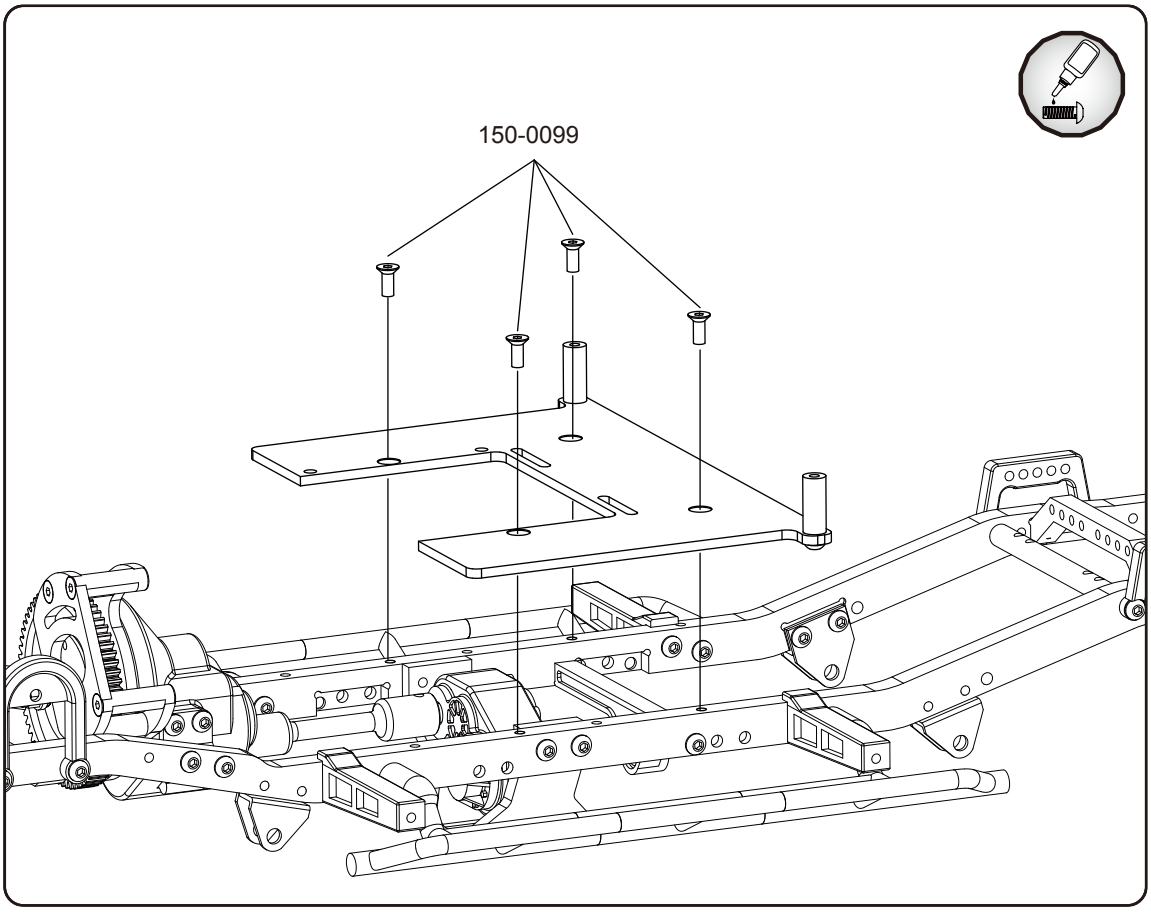

Step 21

X2

150-0101
Steel Flat Head Socket Cap Screw M3 x 10mm
Z-S0860

X2

150-0208
Button Head Self Tapping Screws M3 X 6mm (Black)
Z-S1574

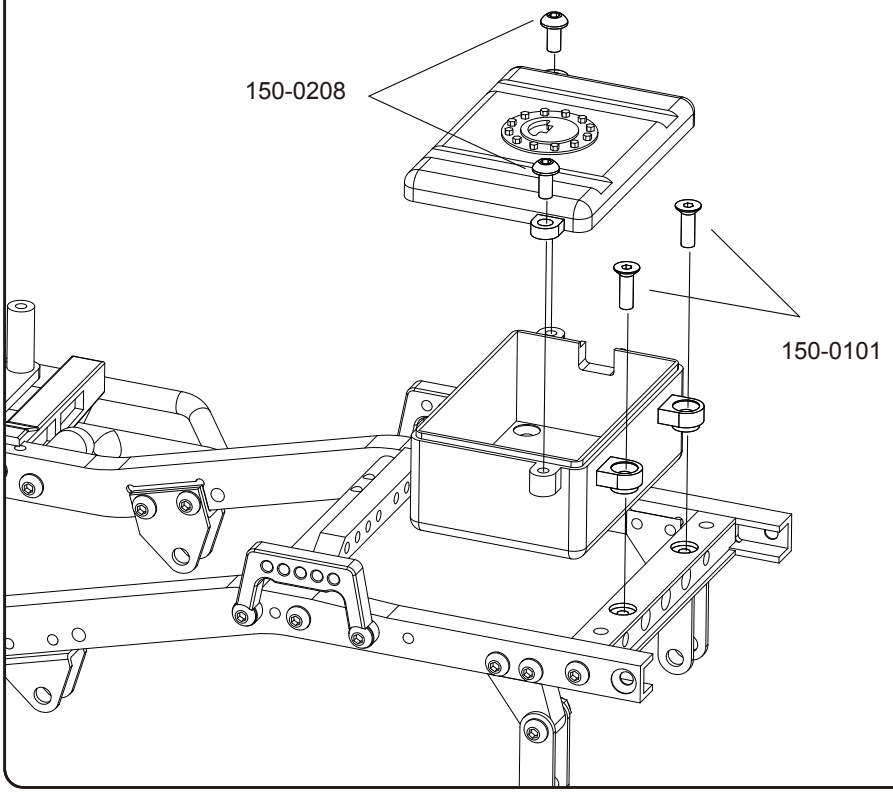

Step 22

X4

150-0065
Steel Button Head Cap Screws M3 x 14mm
Z-S0655

X4

150-0063
Steel Button Head Cap Screws M3 x 10mm
Z-S0653

For the front axle, if your build requires lift blocks, use M3 x 14mm BHCS. If no lift blocks are needed, use M3 x 10mm BHCS as shown in the top right corner.

Choose a 2 or 3 leaf spring configuration.
The installation method is the same for both.

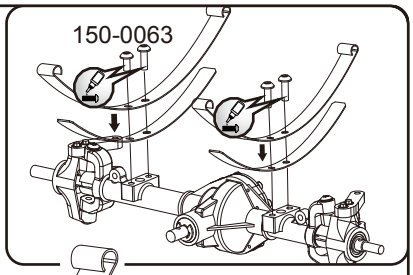

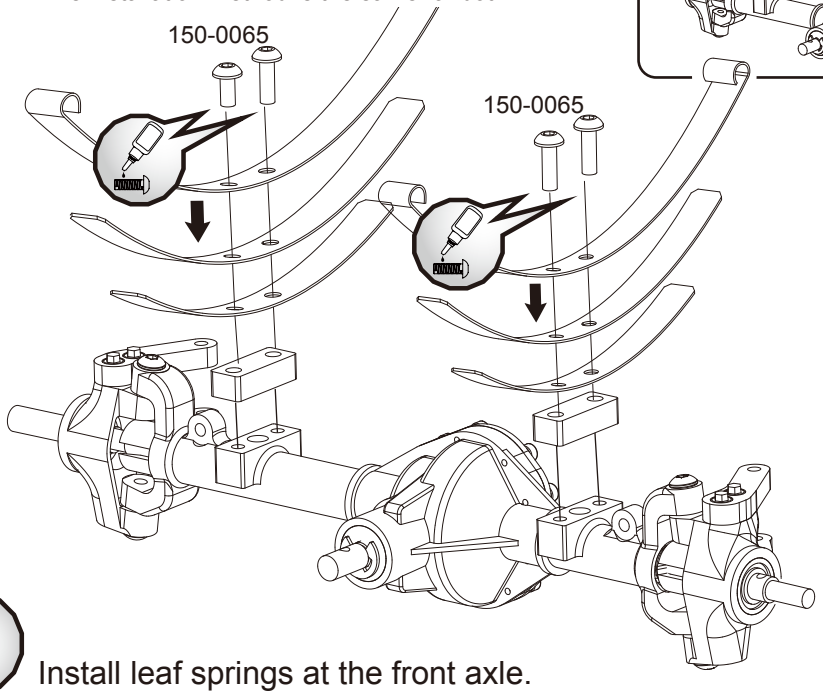

F Install leaf springs at the front axle.

Step 23

X4

150-0066
Steel Button Head Cap Screws M3 x 16mm
Z-S0656

X4

150-0063
Steel Button Head Cap Screws M3 x 10mm
Z-S0653

For the rear axle, if your build requires lift blocks, use M3 x 16mm BHCS. If no lift blocks are needed, use M3 x 12mm BHCS as shown in the top right corner.

Choose a 2 or 3 leaf spring configuration.
The installation method is the same for both.

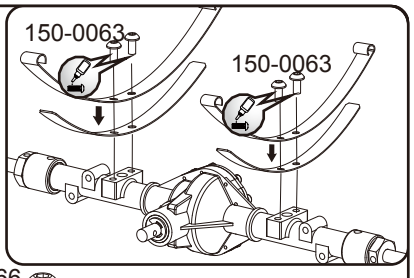

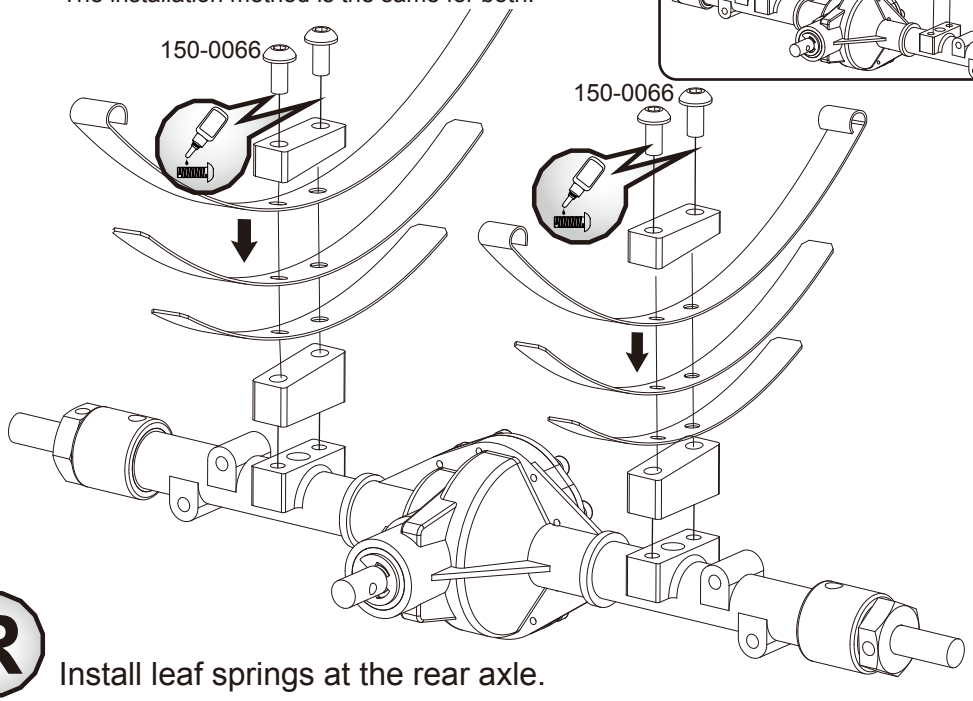

R Install leaf springs at the rear axle.

Step 24

X4

150-0288
Leaf Spring Shoulder Screws (Black)
Z-S0275

X4

175-0007
Nylock Nuts M3 (Black)
Z-S0629

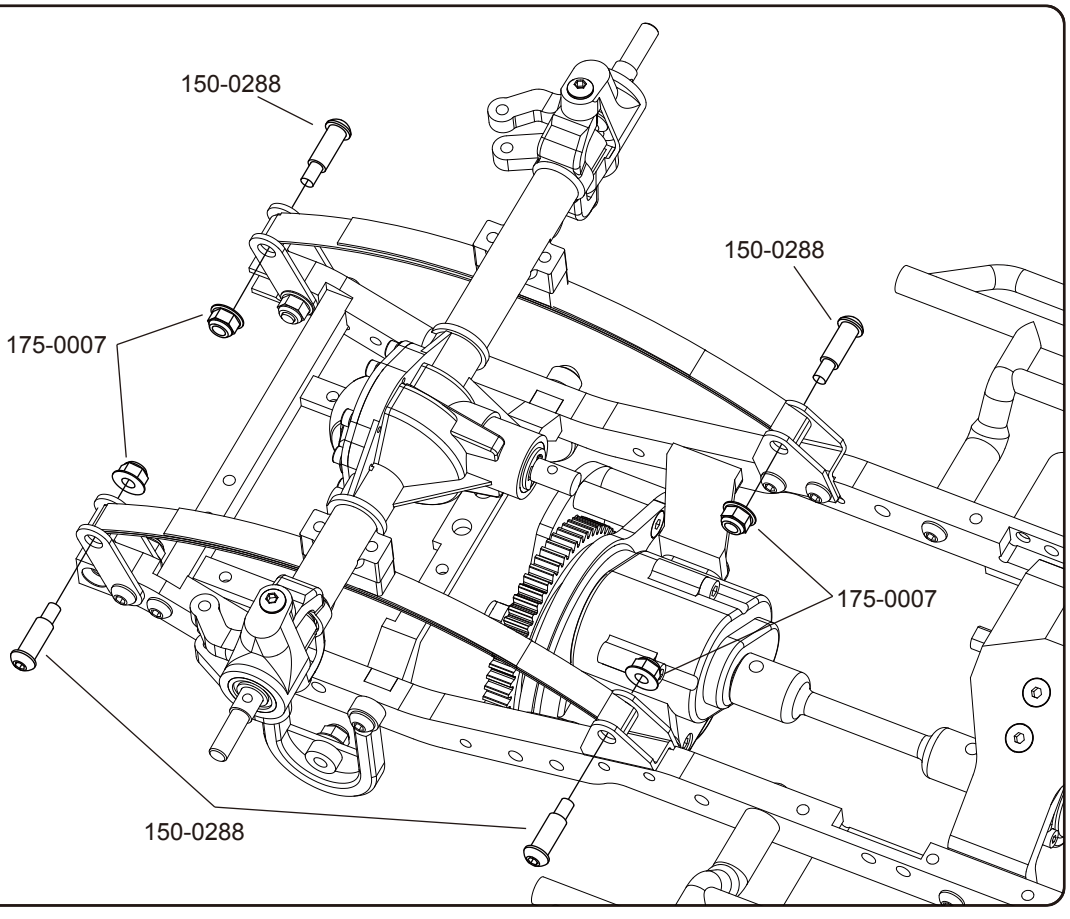

Step 25

X4

150-0288
Leaf Spring Shoulder Screws (Black)
Z-S0275

X4

175-0007
Nylock Nuts M3 (Black)
Z-S0629

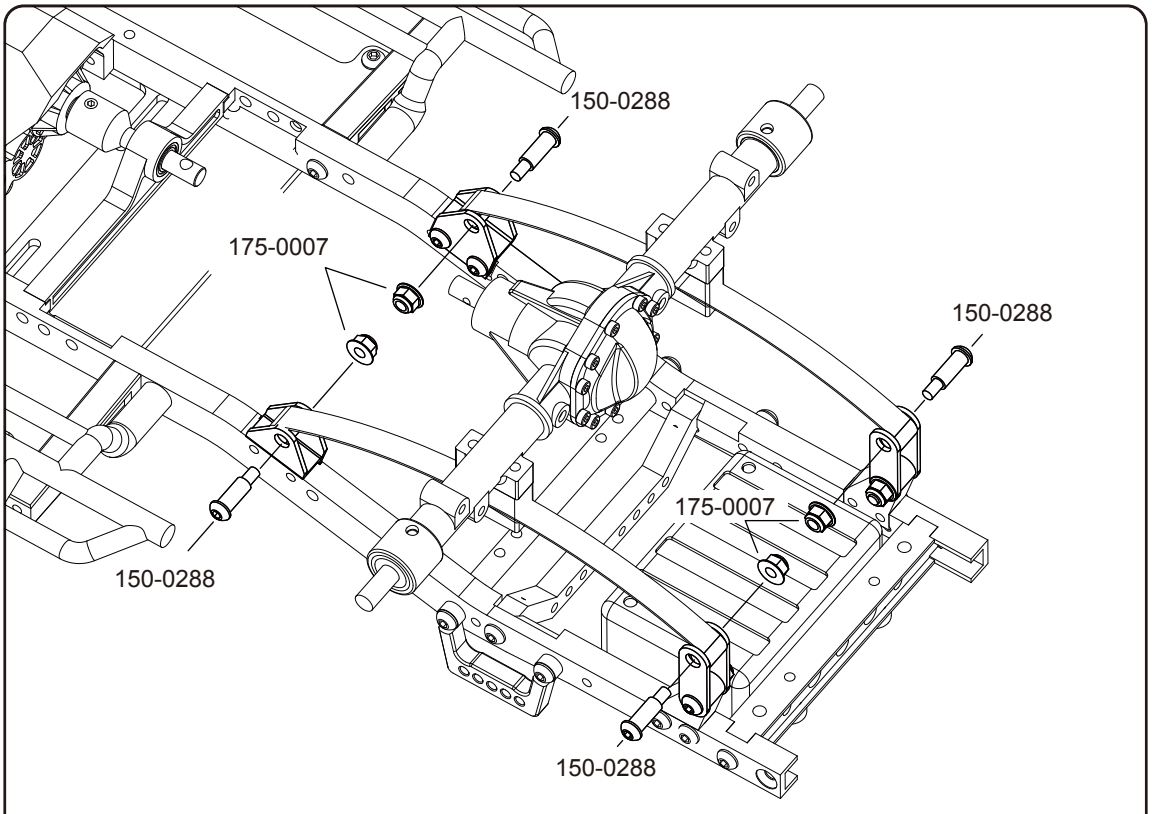

Step 26

X2

150-0066
Steel Button Head Cap Screws M3 x 16mm
Z-S0656

X2

175-0007
Nylock Nuts M3 (Black)
Z-S0629

X2

200-0035
2mm Black Spacer with M3 Hole
Z-S0600

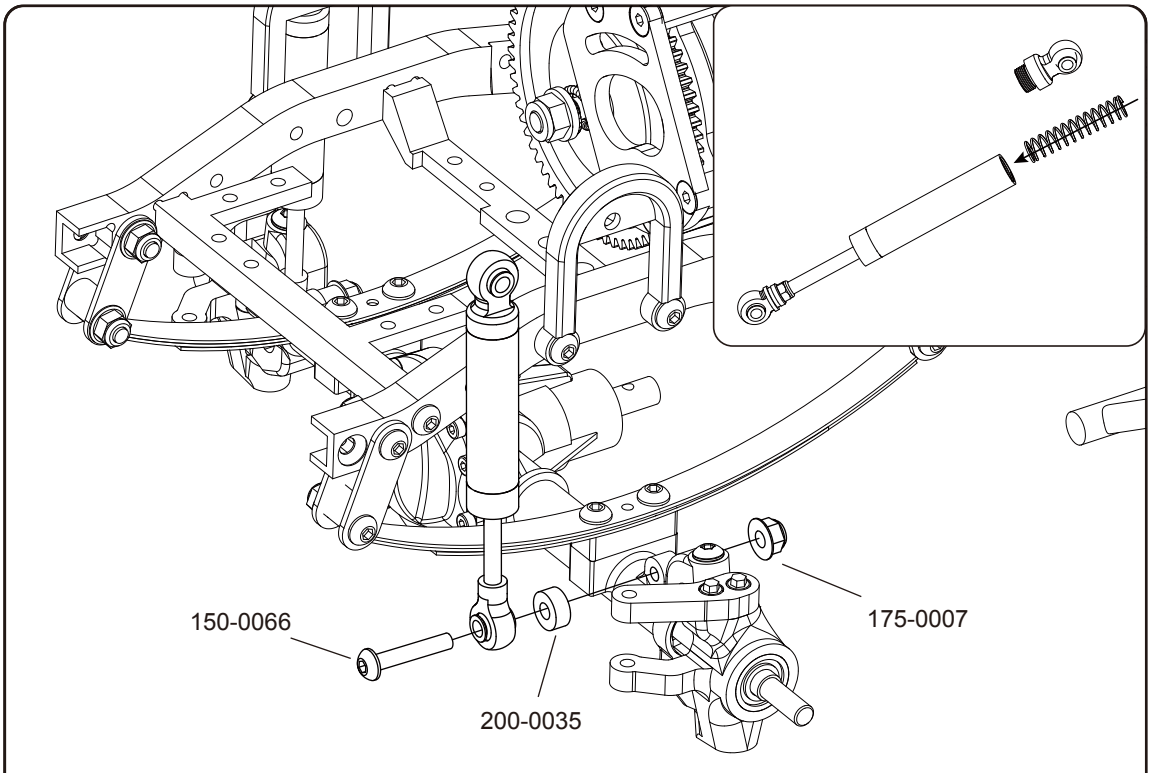

You can choose to install or remove the internal shock spring.

We suggest starting with 35WT silicone shock oil at this stage.
Fill each shock slowly and allow any air bubbles to rise before final assembly.

Step 27

X2

150-0066
Steel Button Head Cap Screws M3 x 16mm
Z-S0656

X2

175-0007
Nylock Nuts M3 (Black)
Z-S0629

X2

200-0036
3mm Black Spacer with M3 Hole
Z-S0806

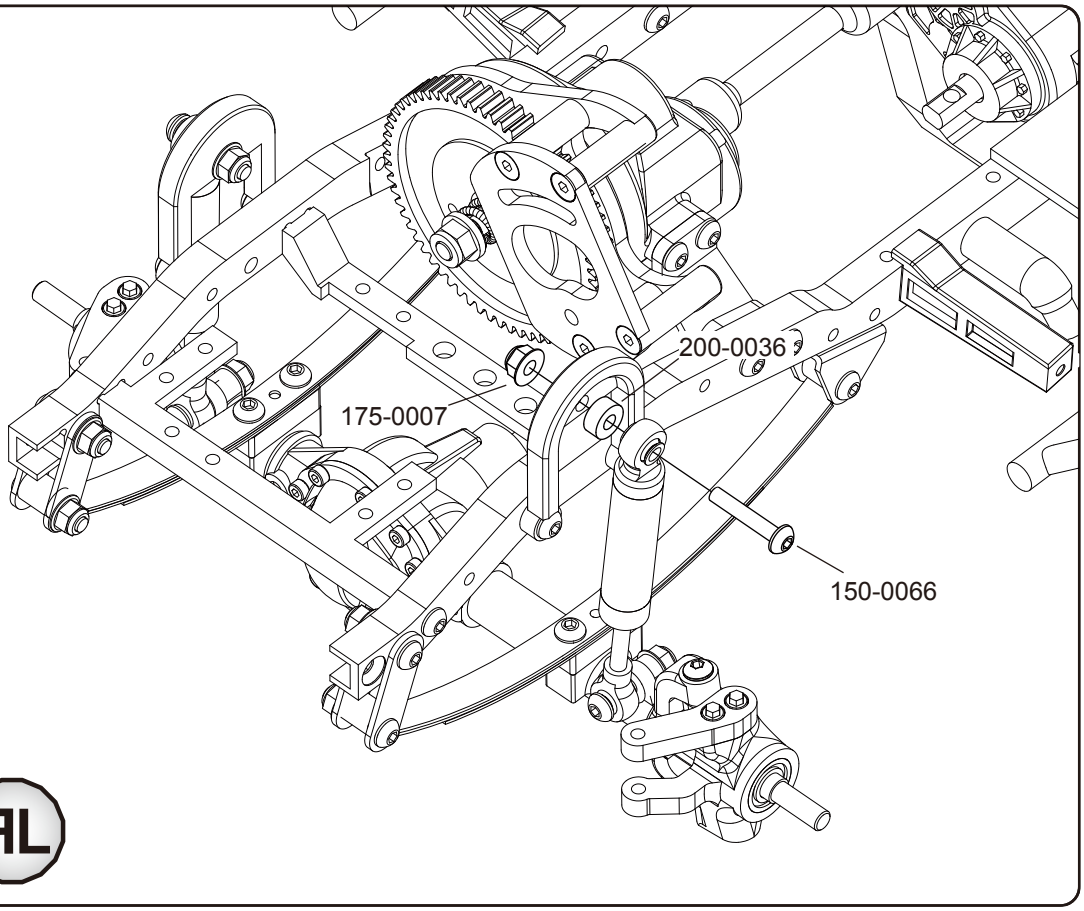

Step 28

X2

150-0258
Button Head Self Tapping Screws M3 X 12mm (Black)
Z-S1691

X2

150-0065
Steel Button Head Cap Screws M3 x 14mm
Z-S0655

X2

200-0035
2mm Black Spacer with M3 Hole
Z-S0600

You can choose to install or remove the internal shock spring.

We suggest starting with 35WT silicone shock oil at this stage.
Fill each shock slowly and allow any air bubbles to rise before final assembly.

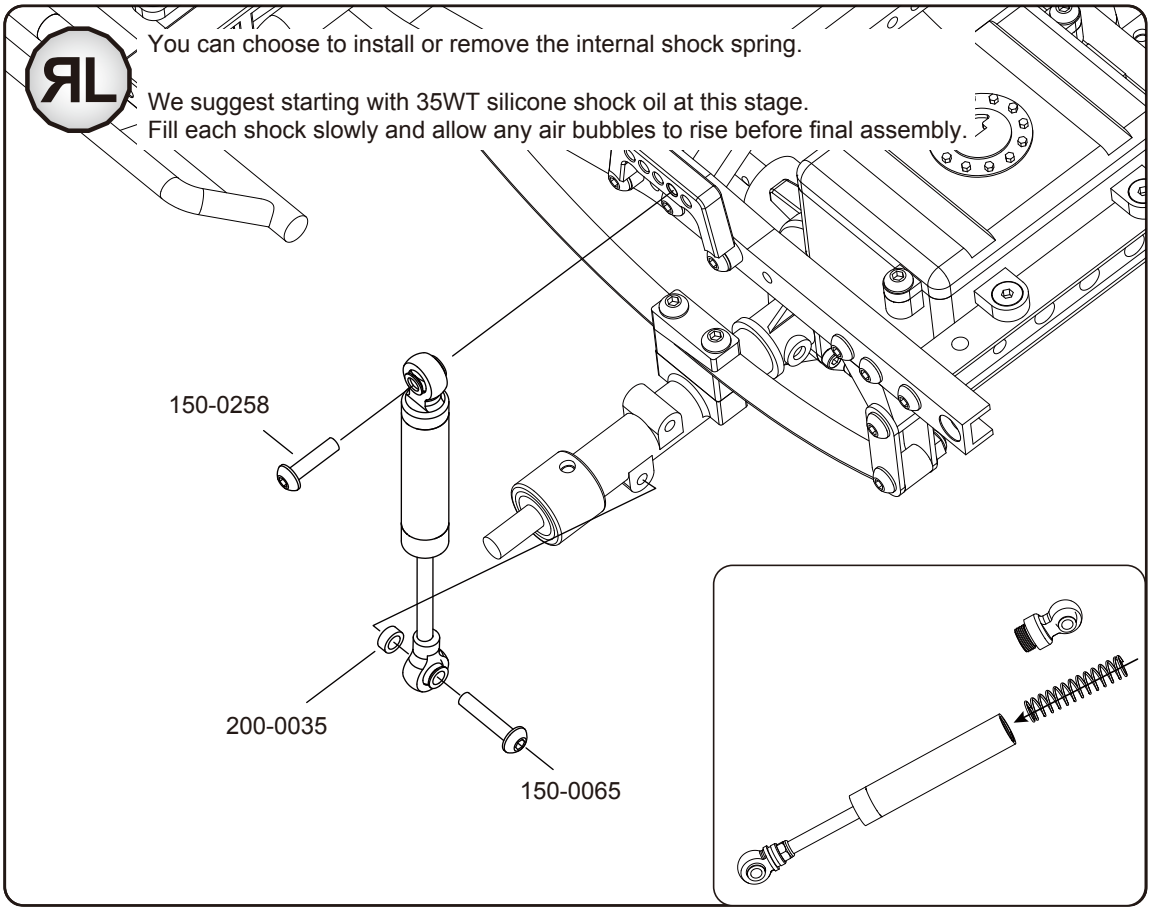

Step 29

X2

150-0062
Steel Button Head Cap Screws M3 x 8mm
Z-S0652

X2

Button Head Self Tapping Screws M3 X 14mm (Black)

X2

150-0258
Button Head Self Tapping Screws M3 X 12mm (Black)
Z-S1691

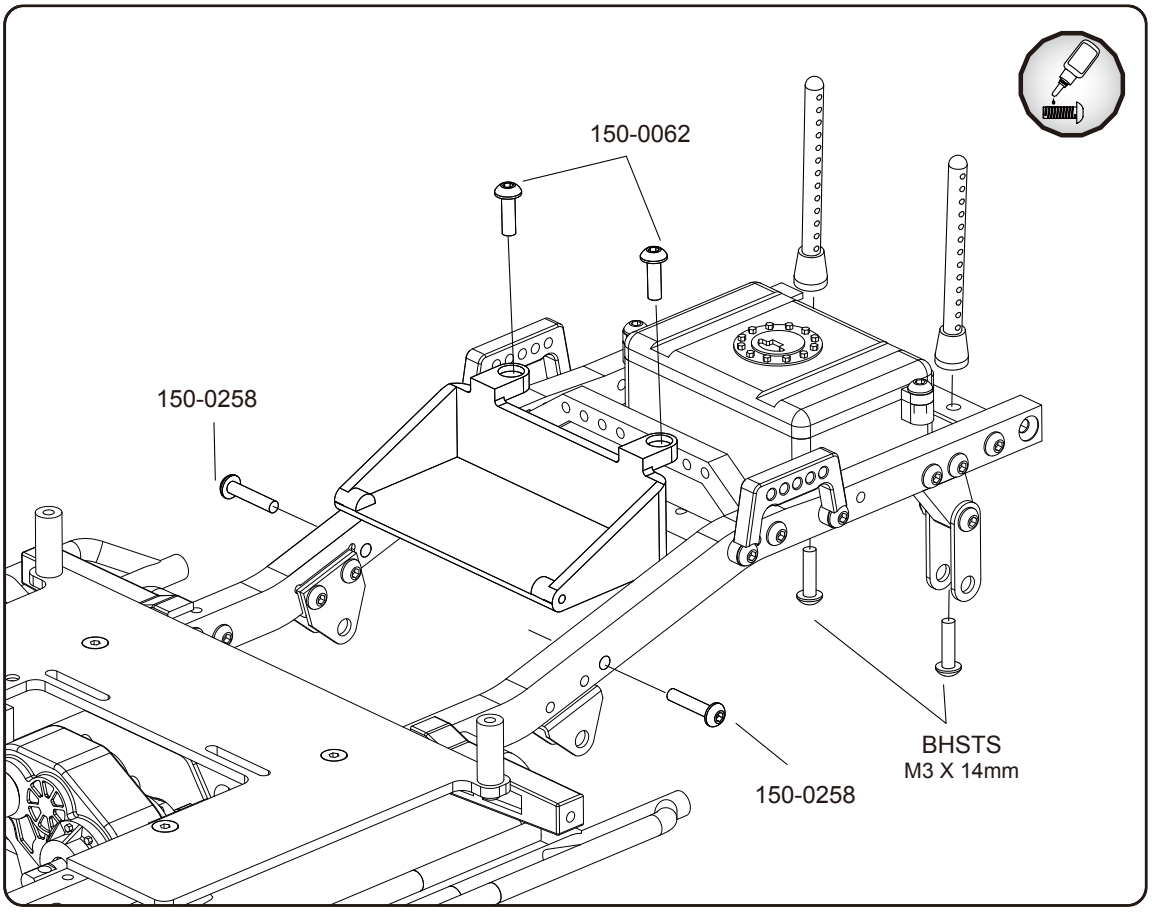

Step 30

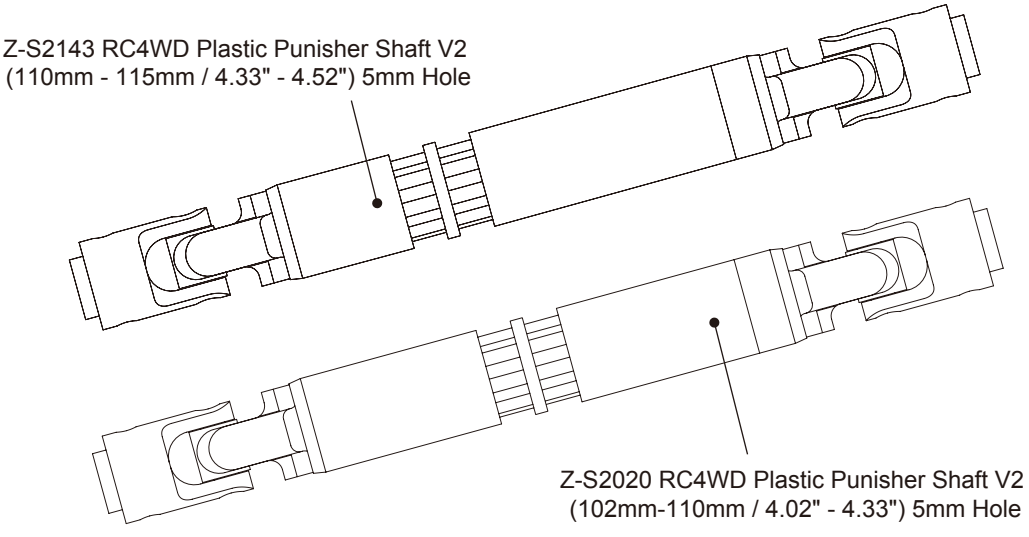

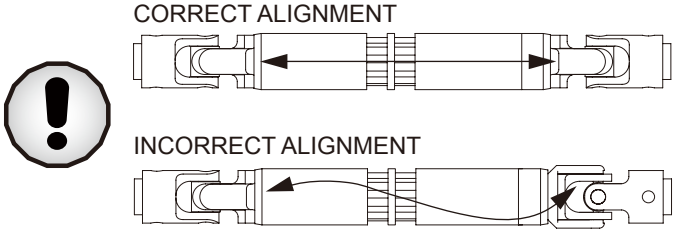

Step 31

X4

150-0202
M3 Driveshaft
Screw Pin
Z-S0804

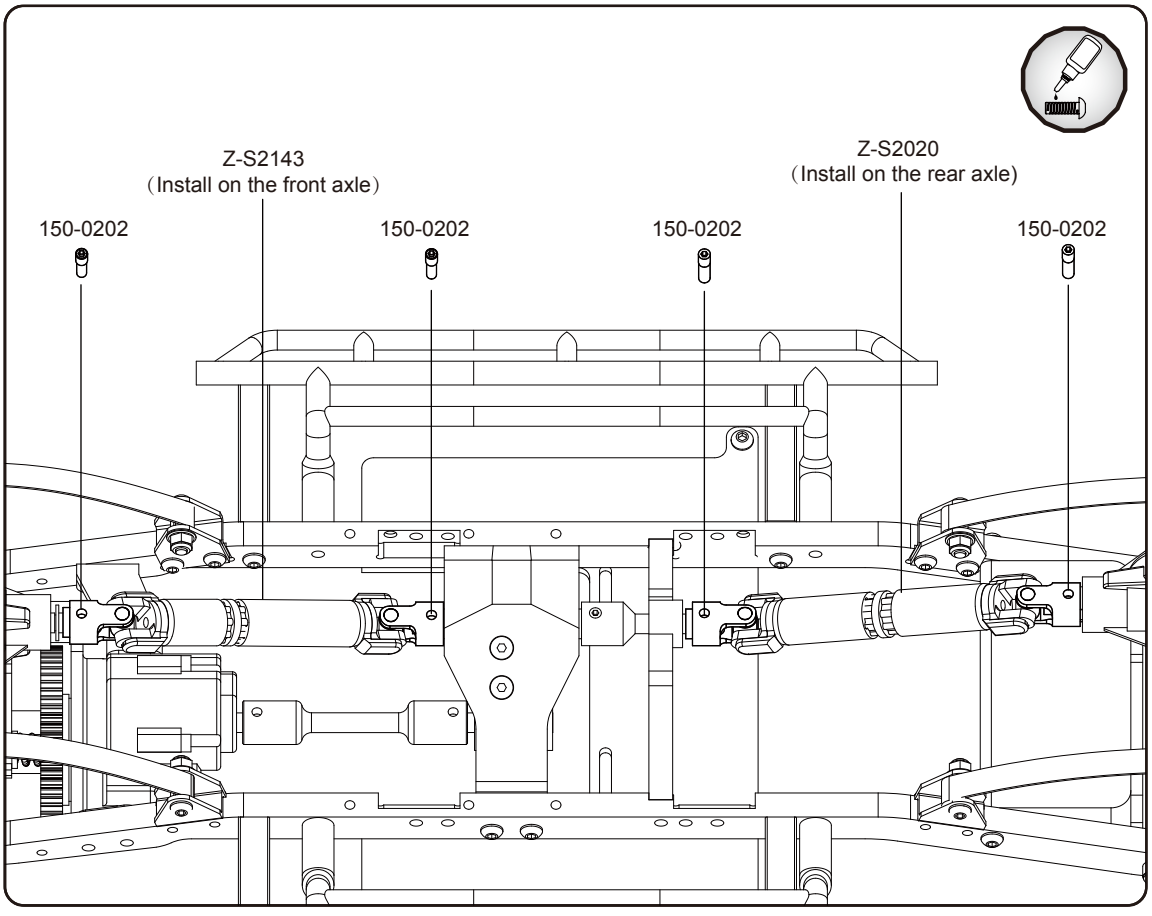

Step 32

X2

150-0216
M3 x 15mm Set Screw
Z-S0650

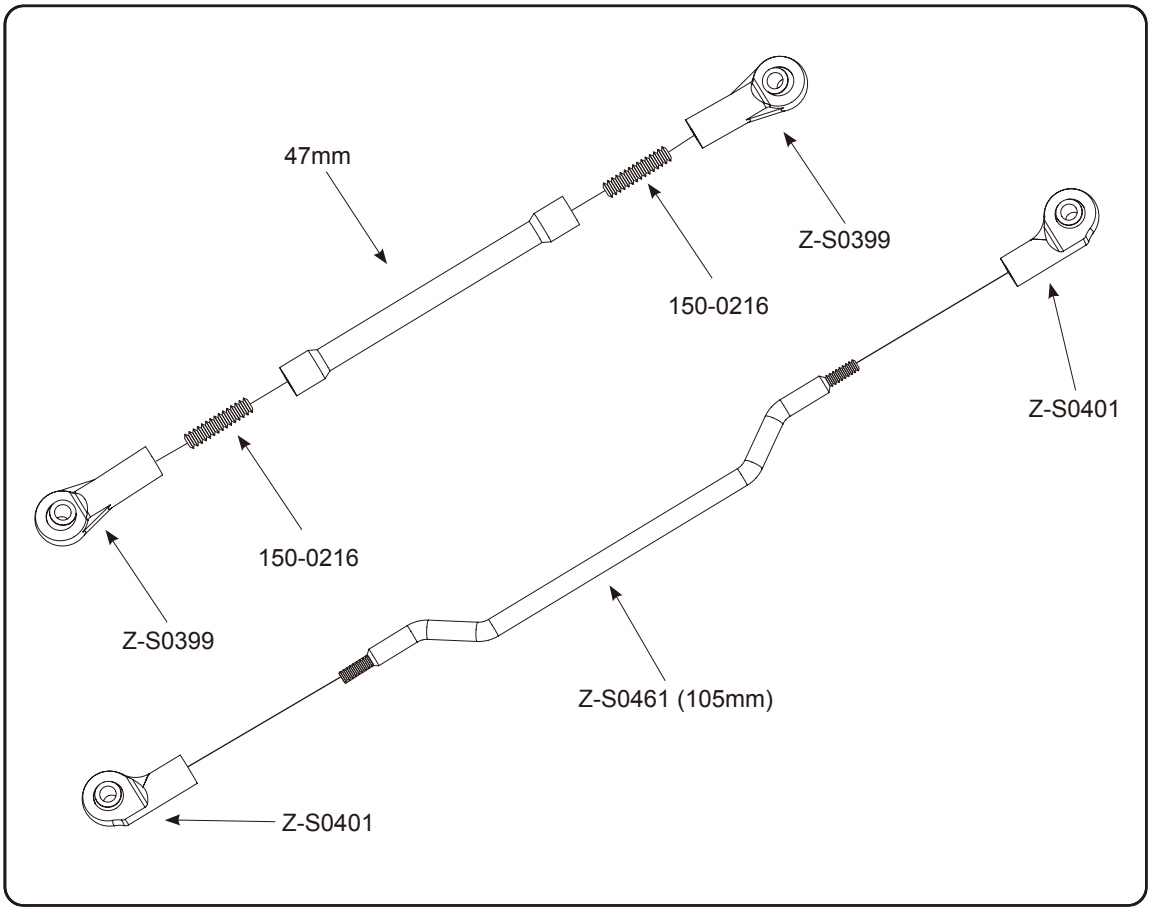

Step 33

X1

150-0067
Steel Button Head Cap
Screws M3 x 18mm
Z-S0657

X1

Z-S0748
Steel Button Head Cap
Screws M3 x 25mm

X2

200-0036
3mm Black Spacer
with M3 Hole
Z-S0806

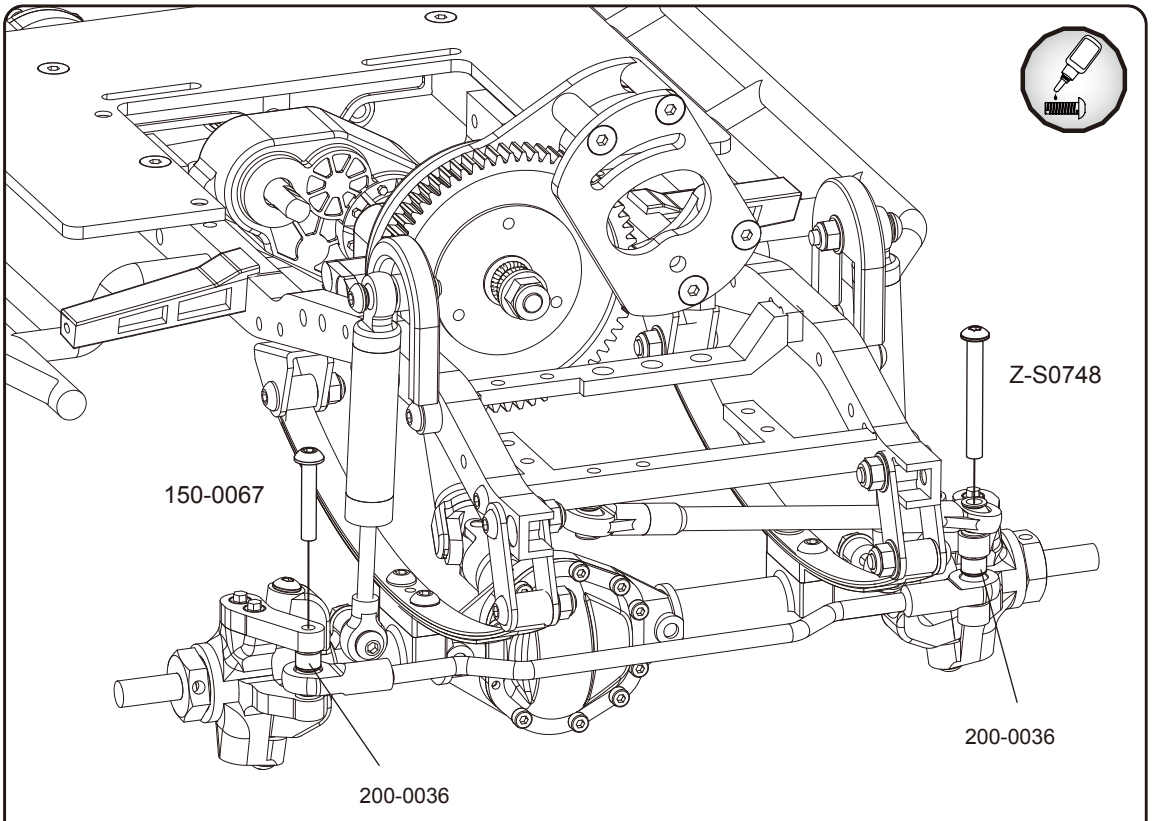

Step 34

X24

150-0412
RC4WD Miniature
Scale Hex Bolts
(M2.5 x10mm) (Black)
Z-S0381

X1

825-0004
Miniature Scale Hex
Bolt Tool for
M2.5 & M3 Scale Bolts
(2.5mm Hex)
Z-S0635

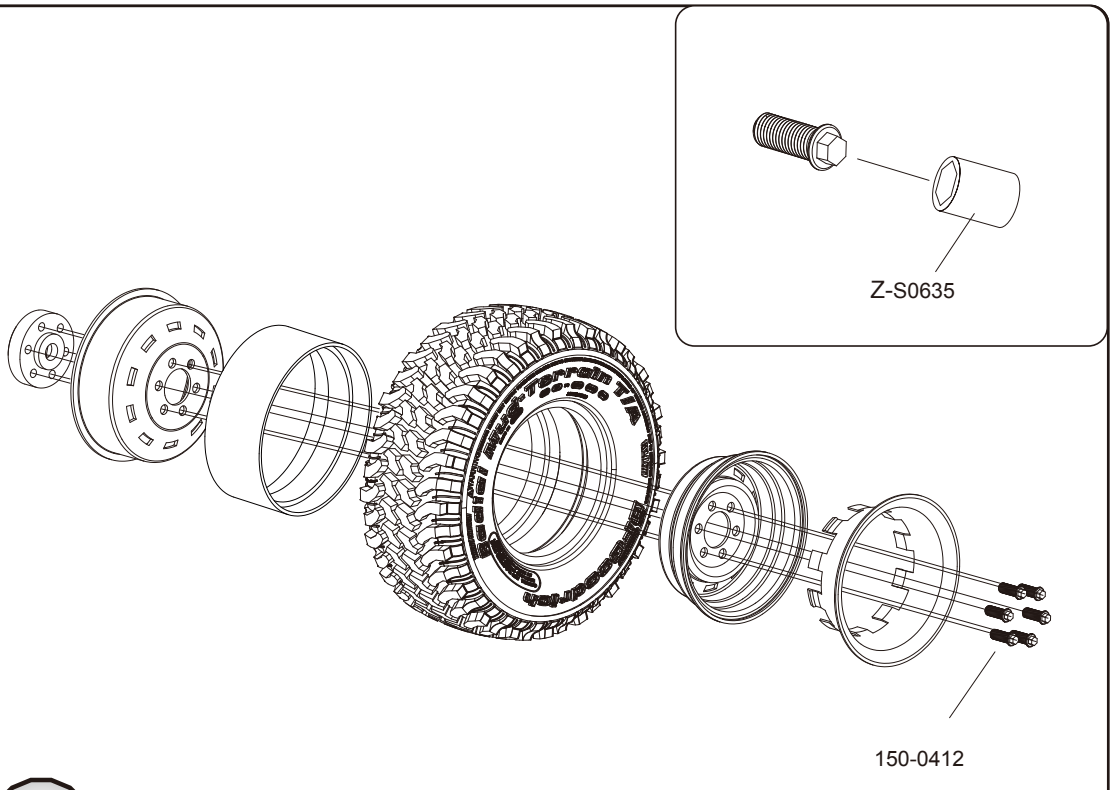

x4 Use the included Z-S0635 Hex Bolt Tool for installation.

Step 35

X4

Z-S0298
RC4WD Rally 1/10
Locking Wheel Hubs

X1

Z-S0856
Installation Tool for
Mickey Thompson
Metal Series 1/10
Wheel Center Caps

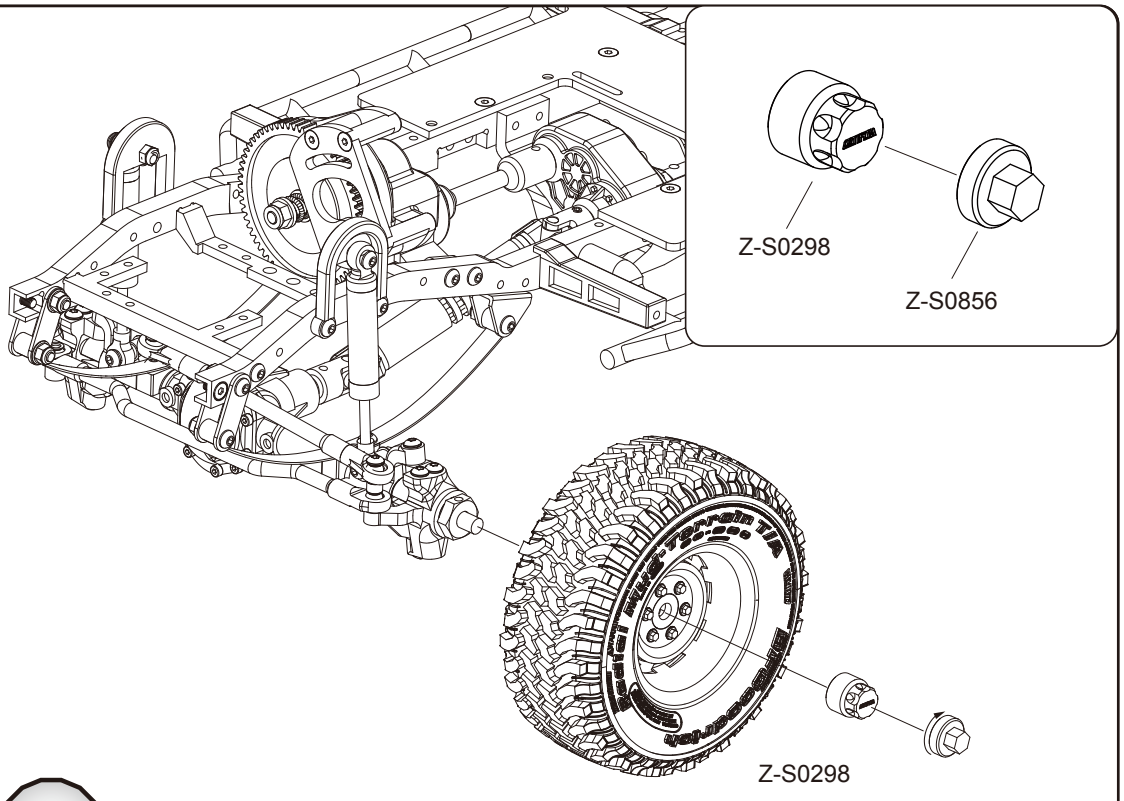

x4 Use the included Z-S0856 Hub Tool for installation.

Step 36

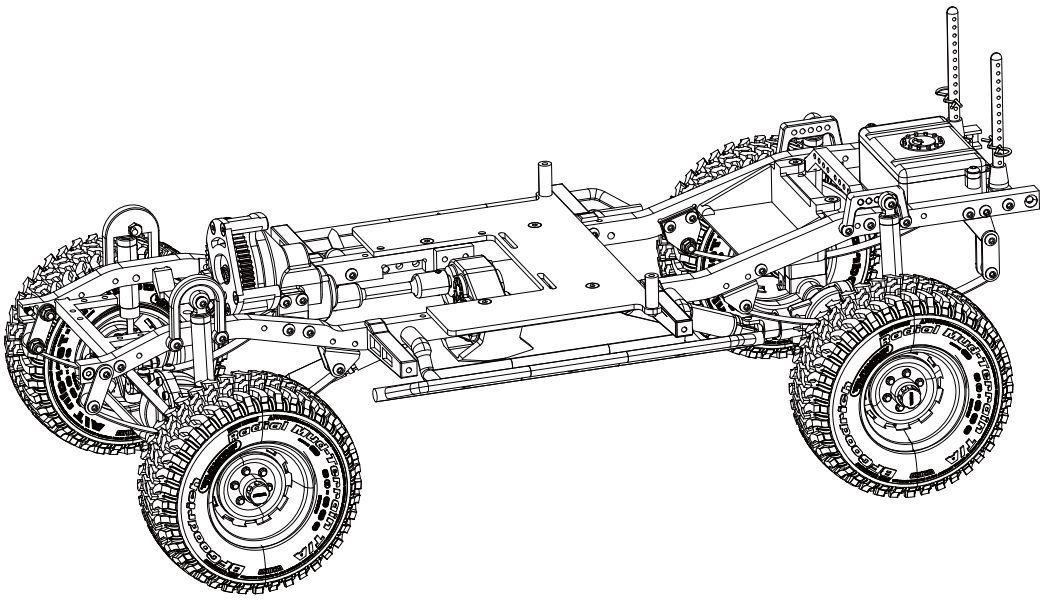

Step 37

X4

150-0195
Button Head Self
Tapping Screws
M3 X 8mm
Z-S1576

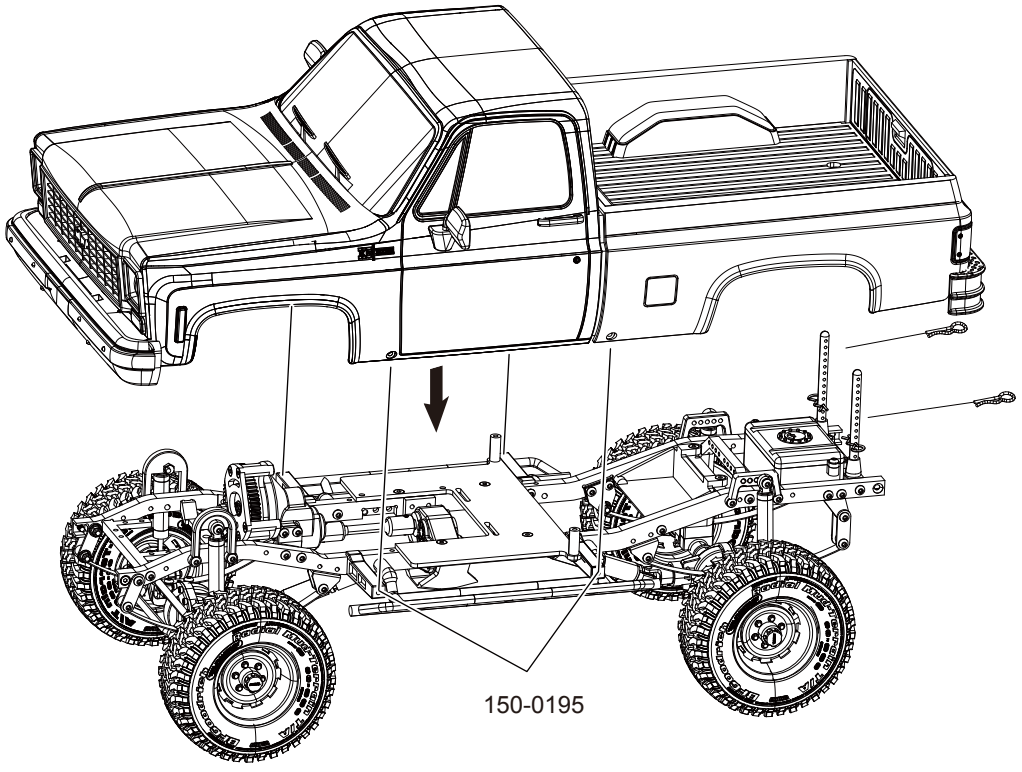

Step 38

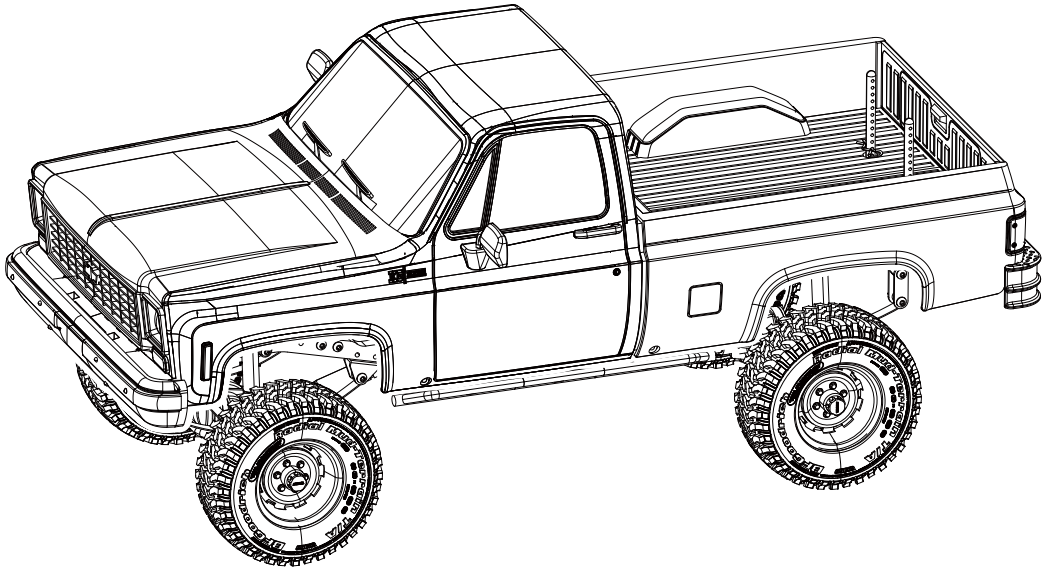

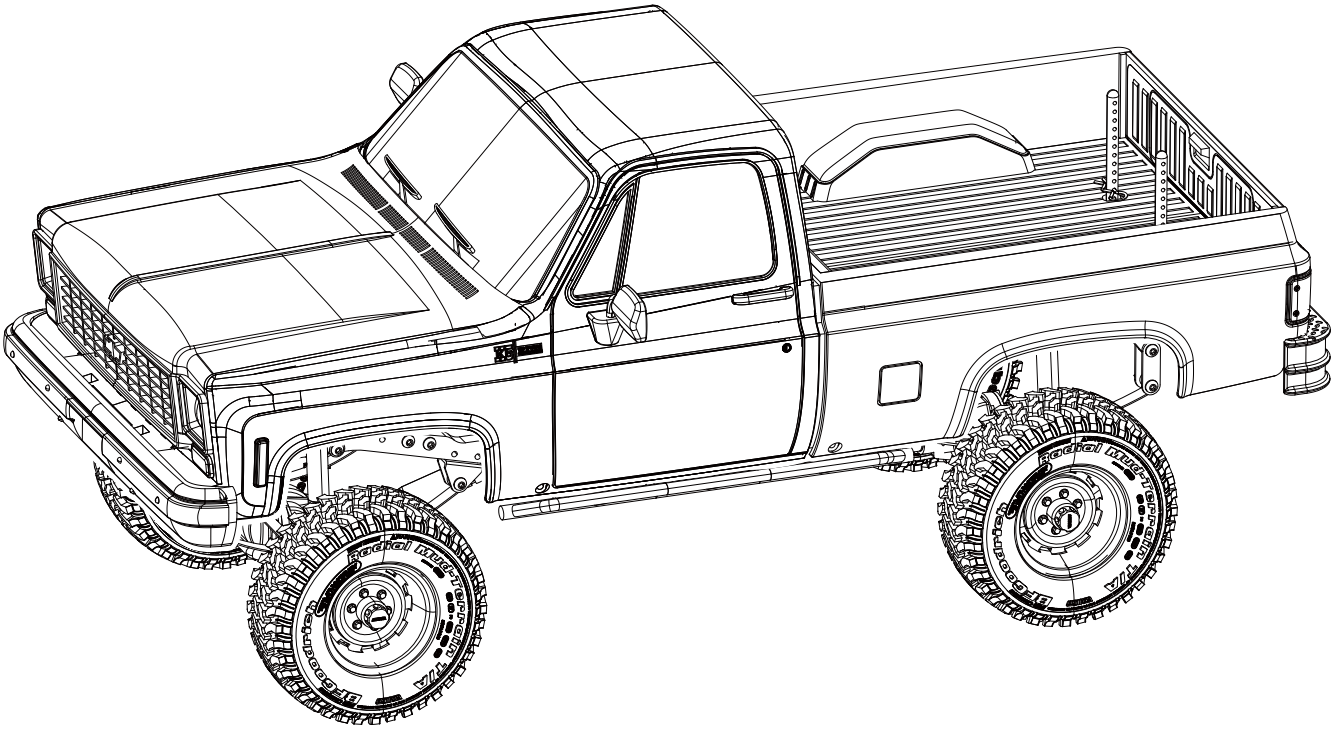

Drive it like you built it!

REPLACEMENT PARTS

Piezas de repuesto / Pièces de rechange / Ersatzteile

Z-A0096	K44 Ultimate Scale Cast Rear Axle
Z-A0101	K44 Ultimate Scale Cast Front Axle
Z-B0021	RC4WD Chevrolet Blazer and K10 Chrome Mirror
Z-B0023	RC4WD Chevrolet K10 Chrome Rear Step Bumper
Z-B0029	Trail Finder 2 Plastic Body Posts
Z-B0258	RC4WD Chevrolet K10 Scottsdale Hard Body Complete Set
Z-C0053	Trail Finder 2 "LWB" Chassis Set
Z-D0022	RC4WD Superlift Superide Scale Shock Absorbers 70mm
Z-D0024	RC4WD Superlift Superide Scale Shock Absorbers 80mm
Z-S0011	RC4WD Lift Blocks for Yota and K44 Axles
Z-S0047	Leaf Spring Shackles & Mounts Kit
Z-S0199	RC4WD Body Mounts and Shock Towers for Chevrolet Blazer
Z-S0298	RC4WD Rally 1/10 Locking Wheel Hubs
Z-S0399	M3 Medium Straight Plastic Rod End (20x)
Z-S0401	M3 Offset Short Plastic Rod End (20x)
Z-S0461	RC4WD 105mm Hardened Steering Link V2
Z-S0552	Heavy Duty Nylon Strap Lock (5)
Z-S0592	Fuel Cell Radio Box
Z-S0597	Shock Hoops for Trail Finder 2 Chassis
Z-S0598	Transfer Case mount for Trail Finder 2 Chassis
Z-S0678	Electronics Top Plate w/Servo Mounts For Trail Finder 2
Z-S0802	R3 Single Speed Transmission Mounts
Z-S0856	Installation Tool for Mickey Thompson Metal Series 1/10 Wheel Center Caps
Z-S0898	TF2 Long Drive Shaft Coupling for R3 Single Speed
Z-S1730	RC4WD Marlin Crawler Side Plastic Sliders for TF2 LWB
Z-S1732	RC4WD Assembly Combo Pack (Oil, Thread Lock, Grease)
Z-S1815	Super Soft Flex Leaf Springs for TF2 (4)
Z-S2020	RC4WD Plastic Punisher Shaft V2 (102mm-110mm / 4.02" - 4.33") 5mm Hole
Z-S2143	RC4WD Plastic Punisher Shaft V2 (110mm - 115mm / 4.33" - 4.52") 5mm Hole
Z-T0225	RC4WD BFGoodrich Mud Terrain KM 1.9" Scale Tires
Z-U0024	Hammer Transfer Case (1.47/1)
Z-U0028	R3 Scale Single Speed Transmission
Z-W0257	Rally 1.9" Beadlock Wheels (Silver)

OPTIONAL PARTS

Partes opcionales / Pièces en option / Optionale teile

Z-A0071	RC4WD Yota II Ultimate Scale Cast Front Axle V2 (Chrome)
Z-A0072	RC4WD Yota II Ultimate Scale Cast Rear Axle (Chrome)
Z-A0080	RC4WD Yota II Ultimate Scale Cast Axle V2 (Front)
Z-A0081	Yota II Ultimate Scale Cast Axle (Rear)
Z-B0010	RC4WD Bench Seat for Chevrolet K10
Z-B0024	RC4WD Chrome Front Grille for Chevrolet Blazer and K10 (80's)
Z-B0026	RC4WD Front Bumper with Brush Guard for Chevrolet Blazer and K10
Z-B0057	RC4WD Cowl Hood for Chevrolet Blazer and K10 (Tall)
Z-B0274	RC4WD Chevrolet K10 Scottsdale Hard Body Complete Set (Blue)
Z-B0276	RC4WD Chevrolet K10 Scottsdale Hard Body Complete Set (Red)
Z-D0002	RC4WD Old Man Emu Nitrocharger Sport Shocks by ARB (70mm)
Z-D0003	RC4WD Old Man Emu Nitrocharger Sport Shocks by ARB (80mm)
Z-D0021	RC4WD Bilstein B6 4600 Series Shock Absorbers (70mm)
Z-D0044	RC4WD Bilstein B6 4600 Series Shock Absorbers (80mm)
Z-D0057	RC4WD Bilstein SZ Series Shock Absorbers (70mm)
Z-D0058	RC4WD Bilstein SZ Series Shock Absorbers (80mm)
Z-D0087	RC4WD Ultimate Scale Shocks 70mm
Z-D0088	RC4WD Ultimate Scale Shocks 80mm
Z-E0001	540 Crawler Brushed Motor 80T
Z-E0002	540 Crawler Brushed Motor 65T
Z-E0003	540 Crawler Brushed Motor 55T
Z-E0004	540 Crawler Brushed Motor 45T
Z-E0005	540 Crawler Brushed Motor 35T
Z-E0009	RC4WD 1/10 Mini Warn 9.5cti Winch
Z-E0018	RC4WD Universal Advanced LED Lighting System
Z-E0020	RC4WD LED Basic Lighting System for Chevrolet Blazer and K10
Z-E0041	RC4WD Brushed 45T Boost Rebuildable Crawler 540 Motor
Z-E0045	RC4WD Brushed 35T Boost Rebuildable Crawler 540 Motor
Z-E0065	540 Crawler Brushed Motor 20T
Z-E0067	540 Crawler Brushed Motor 27T
Z-E0075	RC4WD 1/10 Warn 8274 Winch
Z-E0090	RC4WD 6-Cell 3000mAh NIMH Battery Pack
Z-E0113	Outcry III Waterproof ESC
Z-E0119	RC4WD 1/10 Warn 9.5cti-s Winch
Z-E0125	Twister Extreme Hi-Voltage Coreless Metal Gear Digital Waterproof Servo
Z-R0006	XR4 4-Channel 2.4Ghz Transmitter/Receiver Radio
Z-R0009	XR3 3-Channel 2.4Ghz Transmitter/Receiver Radio
Z-S0003	#3 Aluminum Bumper Mount For Trail Finder 2
Z-S0004	#2 Aluminum Bumper Mount for Trail Finder 2
Z-S0006	#1 Aluminum Bumper Mount For Trail Finder 2
Z-S0013	RC4WD Double Steel Tube Roll Bar for Chevrolet Blazer and K10 (Black)
Z-S0039	RC4WD Aluminum Front Bumper for Chevrolet Blazer and K10
Z-S0109	RC4WD Side Steps for the Chevrolet K10/Blazer (Chrome)
Z-S0150	RC4WD Aluminum Rear Bumper for Chevrolet Blazer and K10
Z-S0157	RC4WD Spring Loaded Hinges for the Chevrolet Blazer and K10
Z-S0162	RC4WD Hidden Winch Aluminum Front Bumper for Chevrolet Blazer and K10
Z-S0192	RC4WD Small Block V8 Engine Bay for Chevrolet Blazer and K10
Z-S0196	Scale Aisin/Yota Style Hubs
Z-S0236	RC4WD Quik Release Body Mount for Chevrolet K10
Z-S0266	RC4WD Windshield Sun Visor for Chevrolet Blazer and K10 V2
Z-S0282	RC4WD Tailgate Net for Chevrolet K10
Z-S0407	RC4WD 12mm Mini Hex Wheel Widener Set (+15mm)
Z-S0451	RC4WD Tough Armor Double Tube Rear Bumper for Chevrolet Blazer and K10
Z-S0456	RC4WD Tough Armor Double Tube Front Bumper for Chevrolet Blazer and K10
Z-S0506	RC4WD Overland Gear Mounting MOLLE Panel for Chevrolet K10
Z-S0565	3 Link Kit For Trail Finder 2 Front Axle w/Panhard Setup
Z-S0566	RC4WD Body Lift Kit for Chevrolet K10 Scottsdale

OPTIONAL PARTS

Partes opcionales / Pièces en option / Optionale teile

Z-S0570 Red Super Soft Flex Leaf Springs (4)
Z-S0603 4 Link Kit For Trail Finder 2 Rear Axle
Z-S0768 RC4WD Adjustable Rear Shock Mounts for Trail Finder 2
Z-S0782 Anti Wrap Bar for Trail Finder 2
Z-S0789 RC4WD Work Rack for Chevrolet K10 Scottsdale Hard Body Complete Set
Z-S0850 RC4WD Mickey Thompson Metal Series 1/10 Wheel Center Caps (2)
Z-S1118 Scale Steel Punisher Shaft V2 (90mm - 115mm / 3.54" - 4.53")
Z-S1122 RC4WD Billet Aluminum Fuel Cell Radio Box (Red)
Z-S1237 King Kong Tow Shackle (Orange)
Z-S1345 70mm Ultimate Scale Shocks Internal Spring Assortment
Z-S1347 80mm Ultimate Scale Shocks Internal Spring Assortment
Z-S1476 Super Scale Steel Leaf Springs for TF2 & Tamiya Bruiser (2)
Z-S1587 RC4WD Teraflex Revolver Z-Box for Trail Finder, F-350, Hilux, Tundra
Z-S1594 RC4WD Teraflex Revolver Shackle
Z-S1744 RC4WD Tough Armor Rear Bumper for Chevrolet Blazer and K10
Z-S1825 RC4WD 12mm Hex Wheel Widener Set (+7mm)
Z-S1839 RC4WD ARB Diff Cover for K44 Cast Axle
Z-S1847 RC4WD Poison Spyder Bombshell Diff Cover for Cast K44 Axle
Z-S1863 Tough Armor Rear Bumper with Hitch Mount for Chevy Blazer and K10
Z-S1864 XVD for Cast K44 Front Axle
Z-S1923 Reverse Mount Spring Hanger Conversion Kit for TF2 and TF2 LWB
Z-S1958 Tough Armor Tube Rear Bumper for Chevrolet Blazer and K10
Z-S2017 Fender Flares for RC4WD Chevy Blazer and K10 Body Sets
Z-T0004 Mud Plugger 1.9" Scale Tires
Z-T0005 Dirt Grabber 1.9" All Terrain Tires
Z-T0034 RC4WD Dick Cepek 1.9" Mud Country Scale Tires
Z-T0049 Rock Creepers 1.9" Scale Tires
Z-T0051 Mud Thrashers 1.9" Scale Tires
Z-T0060 RC4WD Mickey Thompson 1.9" Baja Claw 4.19" Scale Tires
Z-T0061 RC4WD Mickey Thompson 1.9" Baja MTZ Scale Tires
Z-T0086 Prowler XS Scale 1.9" Tires
Z-T0119 RC4WD Dick Cepek FC-II 1.9" Tire
Z-T0154 RC4WD Atturo Trail Blade X/T 1.9" Scale Tires
Z-T0192 RC4WD BFGoodrich Mud Terrain T/A KM3 1.9" Tires
Z-T0193 RC4WD Michelin Agilis C-Metric 1.9" Tires
Z-W0122 RC4WD Enforcer 1.9" Beadlock Wheels
Z-W0127 5 Lug Wagon 1.9" Steel Stamped Beadlock Wheels (White)
Z-W0200 RC4WD Fuel Off-Road Maverick 1.9" Beadlock Wheels
Z-W0261 RC4WD Ballistic Off Road Rage 1.9" Beadlock Wheels
Z-W0274 RC4WD 1911 1.9" Beadlock Wheels
Z-W0294 RC4WD Fuel Off-Road Zephyr Beadlock Wheels 1.9"
Z-W0296 Classic 10-Hole Chrome 1.9" Beadlock Wheels
Z-X0004 RC4WD Cowl Hood for Chevrolet Blazer and K10 (Short)
Z-X0005 RC4WD Roll Bar Chevrolet K10 (Chrome)
Z-X0006 RC4WD Dually Fenders for Chevrolet K10
Z-X0032 Tough Armor Front Winch Bumper for Chevy Blazer and K10
VVV-C0004 Dual Exhaust for RC4WD Chevrolet Blazer and K10
VVV-C0005 Exhaust for RC4WD Chevrolet Blazer and K10
VVV-C1472 Front Inner Fender Set for RC4WD Chevrolet Blazer and K10
VVV-C1473 GMC Jimmy Front Grille for RC4WD Chevrolet Blazer and K10
VVV-C1474 LED Cab Lights for RC4WD Chevrolet Blazer and K10
VVV-C1475 Front Bumper Guards for RC4WD Chevrolet Blazer and K10
VVV-C1476 Towing Mirrors for RC4WD Chevrolet Blazer and K10
VVV-C1514 Oxer Diff Guard for RC4WD K44 Axles
VVV-C5003 Utility Bed for RC4WD Chevrolet K10 Scottsdale
VVV-C5004 Utility Bed Rack for RC4WD Chevrolet K10 Scottsdale
VVV-C5006 Aluminum Utility Bed for RC4WD Chevrolet K10 Scottsdale

www.rc4wd.com

737 N. Gateway St.
Visalia, CA 93291
www.RC4WD.com
support@rc4wd.com

GM is a registered trademark of the GM company.
The GM logo is the property of GM and is used under license to RC4WD.

100-0161