FOR IMMEDIATE RELEASE + FOR IMMEDIATE RELEASE + FOR IMMEDIATE RELEASE + FOR IMMEDIATE RELEASE

Ready to hit the trail?



TRAILFINDER 2

1/10 SCALE OFFROAD TRUCK KIT WITH HARD BODY

Adventures can happen anywhere. Nothing will give you more fun in the sand, dirt, snow, or mud than the Trail Finder 2. Part scale truck, part adventurer, your TF2 is ready for your mud kicking trail-loving lifestyle!

The TF2 has both detailed styling and aggressive performance. You will find a balance of capability and performance built into every TF2. Performance of the TF2 is smooth and with its 2 speed selectable transmission, 4WD drivetrain, bullet-proof transfer case and quality metal components throughout. The TF2 is truly a work of art in both appearance and performance.

Every TF2 is compatible with a full range of option and performance parts designed to enhance the performance and add to the scale look of the only true scale 1/10 offroad truck... The Trail Finder 2. Your adventure awaits....

- *Custom Designed for True to Scale Looks*
- *Realistic Billet Aluminum Ladder Frame Chassis*
- *2 Speed Remote Selectable Transmission*
- *Center Mounted Realistic 4x4 Transfer Case*
- *Yota II Ultimate Scale Cast Axles*
- *True to Scale Leaf Spring Suspension*
- *Highly Detailed Body with Dropped Bed and More*
- *1.55" Stamped Steel Beadlock Wheels with Lug Nuts*
- *Super Grip High Performance Mud Thrasher Tires*
- *Realistic Tube Bumpers - Rock Rails - Skid Plate*

TF2



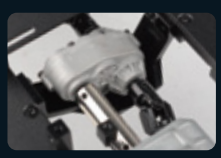



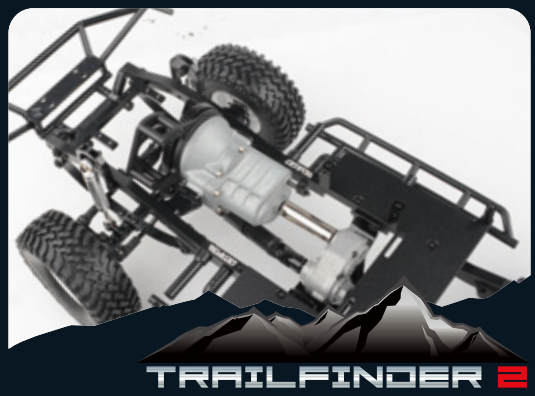

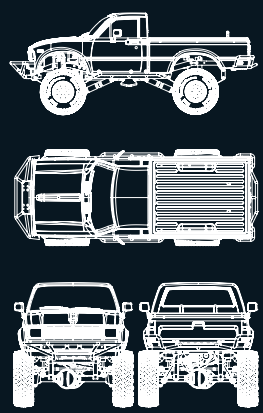

PRECISION ENGINEERED · BULLETPROOF COMPONENTS · PERFORMANCE PARTS

For more information, upgrades and all the latest news, visit us at: rc4wd.com



TRAILFINDER 2

1/10 SCALE OFFROAD TRUCK KIT WITH HARD BODY

DRIVE TRAIN



The R3 2 speed transmission comes with a fully machined billet aluminum case and new wider gears to allow for more abuse along with a Delrin spur with slipper clutch. The designed motor mount is adjustable in 10 positions.



The TF2 includes the Hammer Transfer Case. Packed with detail, the case features a cast metal exterior and the .8 Mod widened gears for durability.



Drawing on the success of the RC4WD MOA gear sets, the TF2 drivetrain has the most durable gears RC4WD has to offer so the TF2 will stay on the trail, day after day.



The most scale accurate axles on the market, the RC4WD Yota II Ultimate Scale Cast Axles feature innovative round knuckles, new lower mounting points and compact.



The Driveshafts for the TF2 are an all new design featuring bulletproof steel universals and a new high quality plastic shaft for great driveline angles and durability on the trail.

PRECISION ENGINEERED · BULLETPROOF COMPONENTS · PERFORMANCE PARTS

For more information, upgrades and all the latest news, visit us at: rc4wd.com



TRAILFINDER 2

1/10 SCALE OFFROAD TRUCK KIT WITH HARD BODY

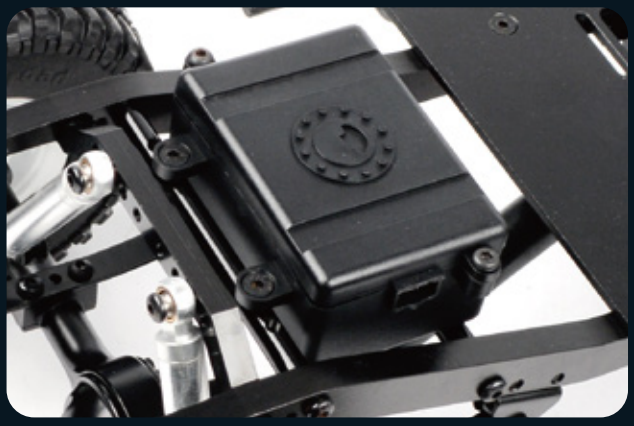

The TF2 Chassis features a molded fuel cell that doubles as an electronics storage box plus an aluminum, frame-mounted under cab electronics tray for multiple electronics mounting options.

SUSPENSION



The TF2 includes a set of RC4WD Ultimate Scale Shocks. Designed for ultimate scale looks and ultimate performance. Machined from billet aluminum, rebuildable and internally sprung.



The TF2 Chassis is a machined billet aluminum ladder frame design with leaf springs, scale shock hoops, chassis servo mounts and hard body mounts.



The TF2 includes a set of RC4WD White Stamped Steel 1.55” internal beadlock wheels. Super tough paintable white finish, aluminum internal ring and popular 6 lug design.



Every TF2 needs a tough set of rock grabbing tires and the included Mud Thrashers in X3 Compound deliver the traction as well as perfect scale looks in just the right size.

PRECISION ENGINEERED · BULLETPROOF COMPONENTS · PERFORMANCE PARTS

For more information, upgrades and all the latest news, visit us at: rc4wd.com



THE DETAILS



The Mojave Body Set includes add on windshield wipers, mirrors, marker light details and door handles for the ultimate in scale looks. These items are also easily replaceable if damaged.



The TF2 Mojave body features new late model style square headlights, chrome bumpers and a redesigned shape of the classic 4x4 body style. More accurately proportioned and better details.



The TF2 Kit Mojave Body Set includes a great dropped bed molded directly into the body. It's perfect for carrying all your scale accessories or spare wheel and tire!



Another industry first, the TF2 Mojave Body Set includes a bolt on, scale accurate molded cab back with every kit so you can use just the cab for a truggy style build.



The TF2 kit also includes scale rock rails plus front and rear tube rock guard bumpers. The front bumper has a winch mount built right in for an optional RC4WD winch.

PRECISION ENGINEERED · BULLETPROOF COMPONENTS · PERFORMANCE PARTS

For more information, upgrades and all the latest news, visit us at: rc4wd.com



TRAILFINDER 2

1/10 SCALE OFFROAD TRUCK KIT WITH HARD BODY

- *Custom Designed for True to Scale Looks*
- *Realistic Billet Aluminum Ladder Frame Chassis*
- *2 Speed Remote Selectable Transmission*
- *Center Mounted Realistic 4x4 Transfer Case*
- *Yota II Ultimate Scale Cast Axles*
- *True to Scale Leaf Spring Suspension*
- *Highly Detailed Body with Dropped Bed and More*
- *1.55" Stamped Steel Beadlock Wheels with Lug Nuts*
- *Super Grip High Performance Mud Thrasher Tires*
- *Realistic Tube Bumpers - Rock Rails - Skid Plate*





SPECIFICATIONS

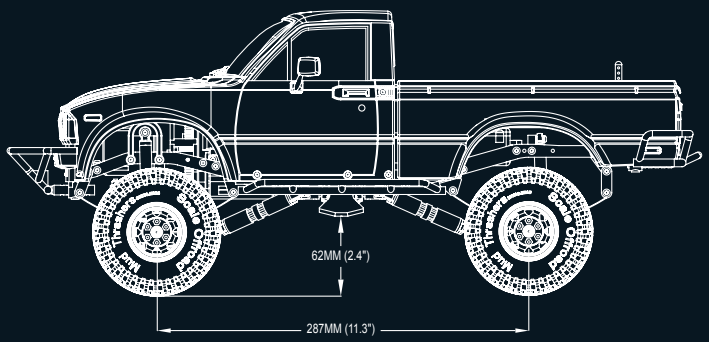

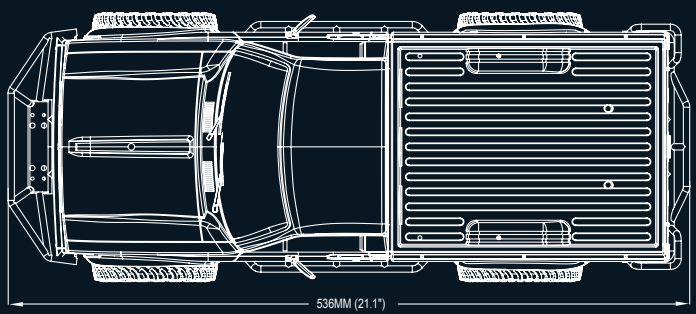

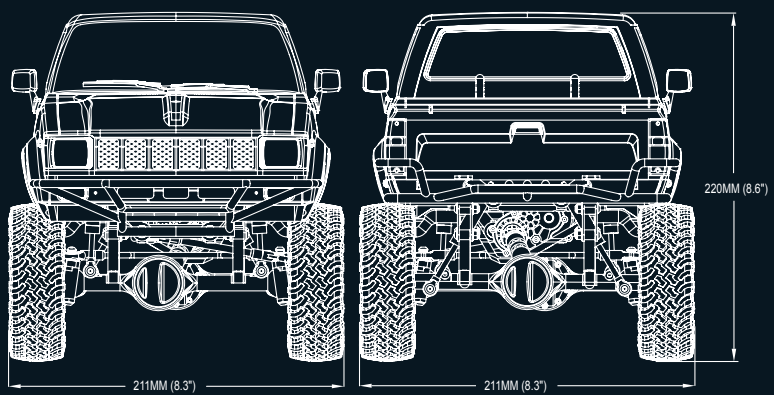

Hammer Transfer Case
Ratio: 1.47:1
Gears: Wide .8 Mod Steel Gears
Features: 8 Bearings, Cast Casing, Hardened Gears

R3 2 Speed Transmission
Ratios
Pinion/Spur 14/64 = 4.57:1
1st Gear 3.47:1
2nd Gear 1.27:1
Gears: Wide Steel .8 Mod, Delrin Spur, Slipper Clutch,
Features: Machined Billet Aluminum Casing, Scale Looking, Motor Mount can be adjusted with up to 10 different Positions, Compatible with other Brand Spurs (Axial, Traxxas, Robinson)

Yota II Ultimate Scale Cast Axles
Ratio: 15/40 = 2.67:1
Width at Hex (Using 4mm TF2 Hexes): 178.2mm

Trail Finder 2 Chassis
Features: Billet Aluminum Constriction, Adjustable Shock Hoops

Drive Shafts
High Quality Plastic Material, Very Durable High Quality Steel Yokes

Wheels
Name: 1.55" OEM Beadlock Wheels
Hub: 12mm Hex
Width: 22mm
Back Spacing: 9mm
Features: Stamped Steel, Aluminum Hub, Internal Beadlock, Very Scale Looking, 6 Bolt Pattern

Bumpers
Tough Armor TF2 Winch front bumper
Tough Armor TF2 Rear Bumper
Tough Armor TF2 Side Sliders
Authentic Looking Crawler Style Tube Bumper. Very High Quality Flexible Plastic, Very Durable, Very Scale.

TF2 Truck Dimensions
Wheelbase: 287mm (11.3")
Width: 211mm (8.3")
Height: 220mm (8.6")
Ground Clearance: 62mm (2.4")
Final Drive Ratios: 1st - 62.1:1, 2nd - 22.75:1

TF2

PRECISION ENGINEERED · BULLETPROOF COMPONENTS · PERFORMANCE PARTS

For more information, upgrades and all the latest news, visit us at: rc4wd.com